SPECIFICATION SHEET

COLLECTION: SAFARI
PRODUCT CODE: SAF-101-SBR



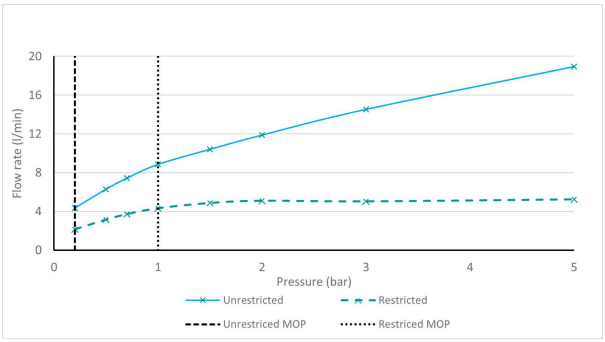

The flow rate displayed is calculated using ideal system conditions. This result should only be taken as an indication as the flow rate may vary depending on the specific in-situ configuration.

TAP TYPE
Basin Mixer Taps

FINISH
Satin Brass

COLLECTION NAME
Safari

GUARANTEE
10 Year Guarantee

PLUMBING SYSTEM SUITABILITY
Pumped System, Combination Boiler, Pressurised System

MINIMUM OPERATING PRESSURE
1.0 Bar MP

MAXIMUM OPERATING PRESSURE
5.0 Bar HP

MATERIAL
Brass

HANDLES
2 Handle

tel: 01934 744466
email: sales@vado.com
www.vado.com

WHERE INSPIRATION FLOWS
TAPS | SHOWERS | FURNITURE

SPECIFICATION SHEET

COLLECTION: SAFARI
PRODUCT CODE: SAF-101-SBR

MOUNTING

Deck Mounted

WASTE

None (Smooth Bodied)

RECOMMENDED FLOW REGULATOR

5l/m flow regulator as standard

WITH ECOTURN COLD START TECHNOLOGY

No

WITH WATER FLOW STRAIGHTENER

No

WITH SWIVEL SPOUT

with Fixed Spout

WITH WATER FLOW AERATOR

Yes

CONNECTIONS / FITTINGS

2 x 1/2" x 1/2" 400mm flexipipe connections. 1/2" male x 1/2" female T connection.

DECK HOLE DRILL DIAMETER

Spout: 35mm. Valve: 30mm

SPARE PARTS

Cold ceramic cartridge: C-206-RTC. Hot ceramic cartridge: C-206-LTC.

STYLE

Round, Lever Handles

tel: 01934 744466
email: sales@vado.com
www.vado.com

WHERE INSPIRATION FLOWS
TAPS | SHOWERS | FURNITURE

VADO

TECHNICAL DRAWING

COLLECTION: SAFARI
PRODUCT CODE: SAF-101-SBR

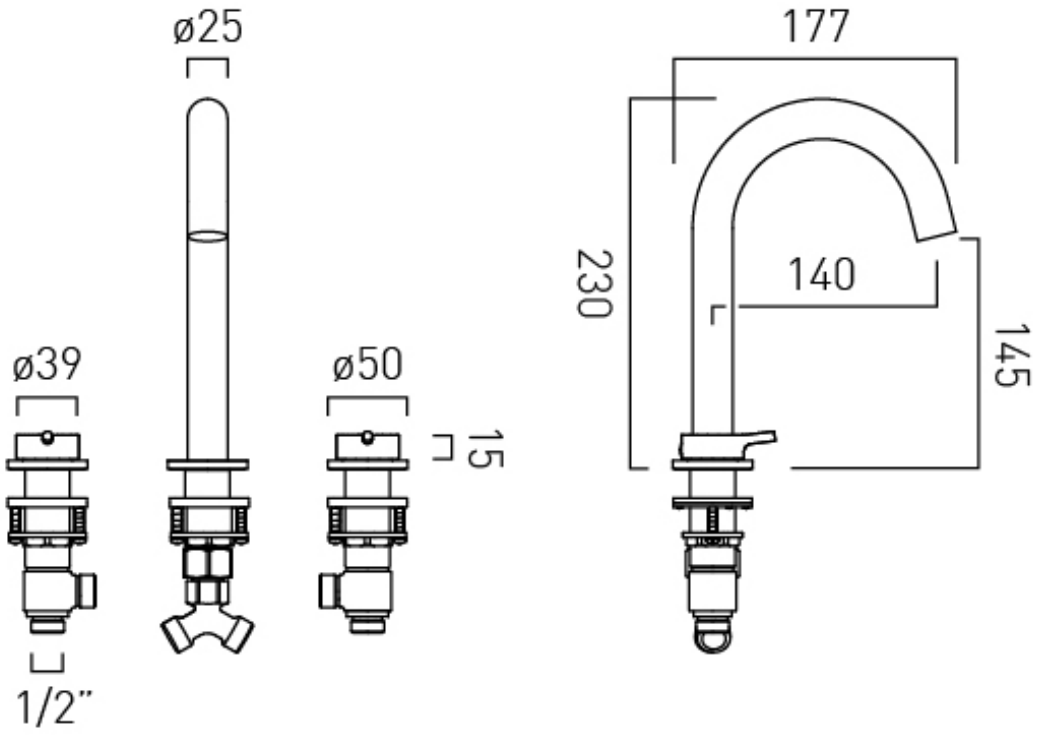

tel: 01934 744466
email: sales@vado.com
www.vado.com

WHERE INSPIRATION FLOWS
TAPS | SHOWERS | FURNITURE

VADO