SPECIFICATION SHEET

COLLECTION: SAFARI
PRODUCT CODE: SAF-148D-SBR

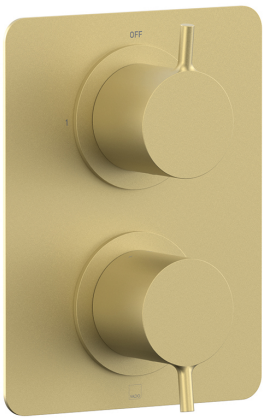

WINNER
Ideal Home AWARDS 2026
BATHROOM

SHOWER TYPE
Shower Valve

VALVE TYPE
Concealed

STYLE
Round

ORIENTATION
Vertical

NUMBER OF OUTLETS
1 Outlet

HANDLES
2 Handle

WITH ALL-FLOW FUNCTION
No

WITH INTEGRATED DIVERTER
No

COMPATIBLE WITH STUDFAST
No

tel: 01934 744466
email: sales@vado.com
www.vado.com

WHERE INSPIRATION FLOWS
TAPS | SHOWERS | FURNITURE

VADO

SPECIFICATION SHEET

COLLECTION: SAFARI
PRODUCT CODE: SAF-148D-SBR

WITH BLEED VALVE FOR SYSTEM FLUSH ON INSTALLATION

No

WITH SHOWER KIT

No

OPTIMUM INSTALLATION DEPTH

82mm

INCLUDES MORTAR / TILE GUARD

Yes

COMPATIBLE WITH EASY-FIX BRACKETS

No

WITH THERMOSTATIC TECHNOLOGY

Yes

MIN-MAX WALL MOUNT

70-95mm

CONNECTIONS / FITTINGS

2 x 3/4" female inlets,1 x 3/4" female outlet inc. bleed valve for system flush on installation, thermostatic cartridge V-704-34S, flow cartridge C-301-RTC

MOUNTING

Wall Mounted

PLUMBING SYSTEM SUITABILITY

Gravity System, Combination Boiler

COLLECTION NAME

Safari

FINISH

Satin Brass

tel: 01934 744466
email: sales@vado.com
www.vado.com

SPECIFICATION SHEET

COLLECTION: SAFARI
PRODUCT CODE: SAF-148D-SBR

MINIMUM OPERATING PRESSURE

0.2 Bar LP

MAXIMUM OPERATING PRESSURE

5.0 Bar HP

GUARANTEE

10 Year Guarantee

tel: 01934 744466
email: sales@vado.com
www.vado.com

WHERE INSPIRATION FLOWS

TAPS | SHOWERS | FURNITURE

VADO

TECHNICAL DRAWING

COLLECTION: SAFARI
PRODUCT CODE: SAF-148D-SBR

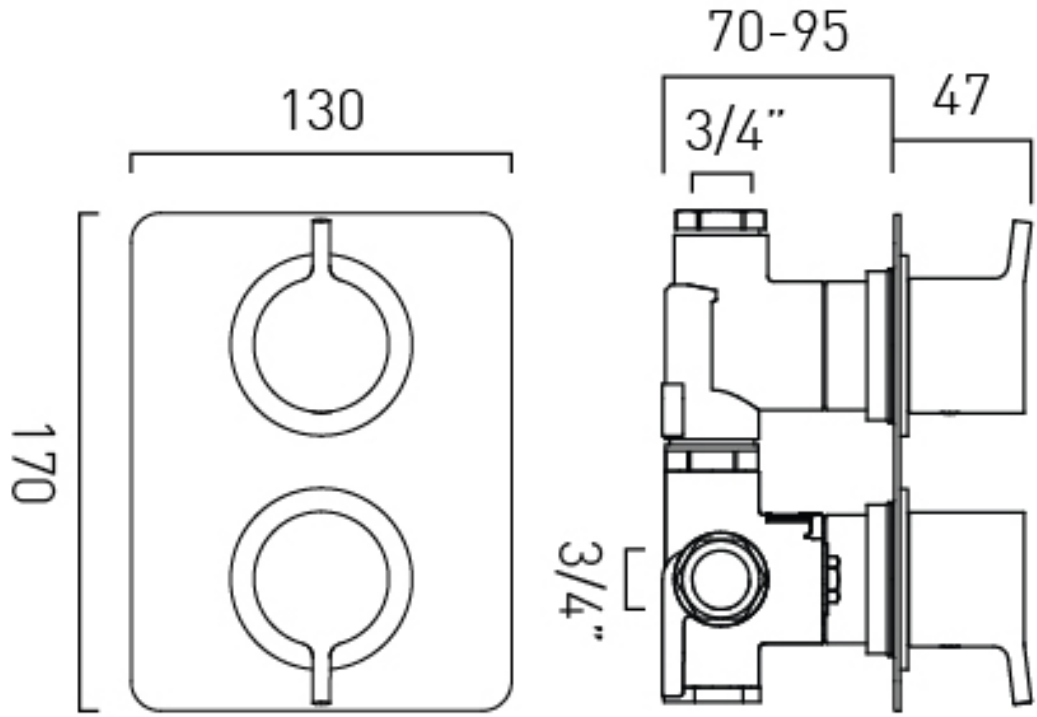

tel: 01934 744466
email: sales@vado.com
www.vado.com

WHERE INSPIRATION FLOWS
TAPS | SHOWERS | FURNITURE

VADO