SPECIFICATION SHEET

COLLECTION: SAFARI
PRODUCT CODE: SAF-100E/SB-LP-PEW



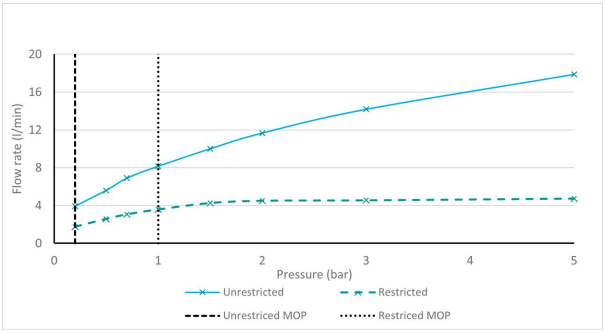

The flow rate displayed is calculated using ideal system conditions. This result should only be taken as an indication as the flow rate may vary depending on the specific in-situ configuration.

TAP TYPE
Tall Extended Taps

FINISH
Pewter

COLLECTION NAME
Safari

GUARANTEE
10 Year Guarantee

BASIN MIXER SIZE
Extended Mono Basin Mixer

PLUMBING SYSTEM SUITABILITY
Gravity System, Pumped System, Combination Boiler, Pressurised System

MINIMUM OPERATING PRESSURE
0.2 Bar LP

MAXIMUM OPERATING PRESSURE
5.0 Bar HP

MATERIAL
Brass

tel: 01934 744466
email: sales@vado.com
www.vado.com

WHERE INSPIRATION FLOWS
TAPS | SHOWERS | FURNITURE

SPECIFICATION SHEET

COLLECTION: SAFARI
PRODUCT CODE: SAF-100E/SB-LP-PEW

HANDLES
Single Lever

MOUNTING
Deck Mounted

WASTE
None (Smooth Bodied)

WITH ECOTURN COLD START TECHNOLOGY
No

WITH WATER FLOW STRAIGHTENER
Yes

WITH SWIVEL SPOUT
with Fixed Spout

WITH WATER FLOW AERATOR
No

CONNECTIONS / FITTINGS
2 1/2" 400mm flexipipe connection

DECK HOLE DRILL DIAMETER
35mm

SPARE PARTS
Ceramic cartridge C-001-A30

STYLE
Round, Lever Handles

NOTES
Cold-start technology

tel: 01934 744466
email: sales@vado.com
www.vado.com

WHERE INSPIRATION FLOWS
TAPS | SHOWERS | FURNITURE
VADO

TECHNICAL DRAWING

COLLECTION: SAFARI
PRODUCT CODE: SAF-100E/SB-LP-PEW

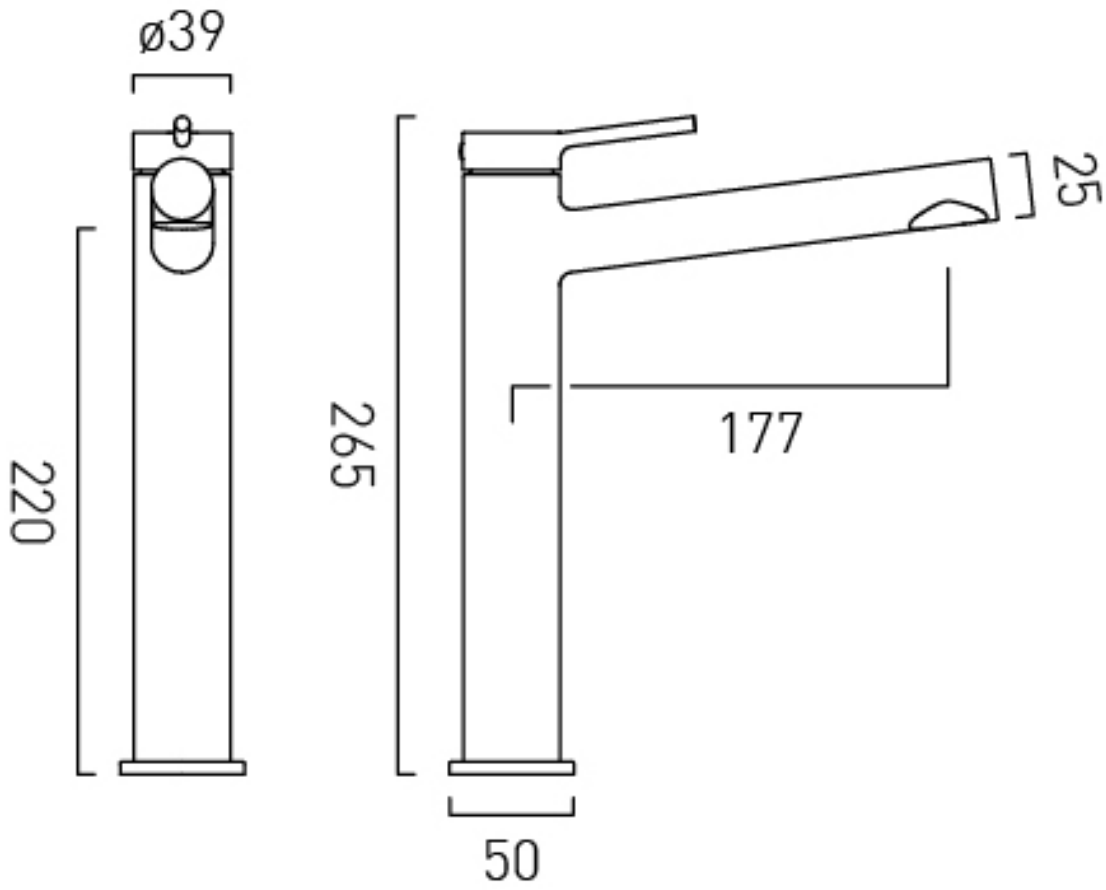

tel: 01934 744466
email: sales@vado.com
www.vado.com

WHERE INSPIRATION FLOWS
TAPS | SHOWERS | FURNITURE

VADO