SPECIFICATION SHEET

COLLECTION: SAFARI
PRODUCT CODE: SAF-100E/SB-CP



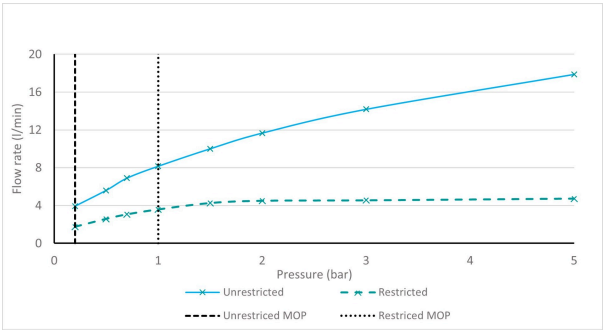

The flow rate displayed is calculated using ideal system conditions. This result should only be taken as an indication as the flow rate may vary depending on the specific in-situ configuration.

TAP TYPE
Tall Extended Taps

FINISH
Chrome

COLLECTION NAME
Safari

GUARANTEE
15 Year Guarantee

BASIN MIXER SIZE
Extended Mono Basin Mixer

PLUMBING SYSTEM SUITABILITY
Pumped System, Combination Boiler, Pressurised System

MINIMUM OPERATING PRESSURE
1.0 Bar MP

MAXIMUM OPERATING PRESSURE
5.0 Bar HP

MATERIAL
Brass

tel: 01934 744466
email: sales@vado.com
www.vado.com

WHERE INSPIRATION FLOWS
TAPS | SHOWERS | FURNITURE

SPECIFICATION SHEET

COLLECTION: SAFARI
PRODUCT CODE: SAF-100E/SB-CP

HANDLES
Single Lever

MOUNTING
Deck Mounted

WASTE
None (Smooth Bodied)

RECOMMENDED FLOW REGULATOR
5L/min flow regulator fitted as standard

WITH ECOTURN COLD START TECHNOLOGY
No

WITH WATER FLOW STRAIGHTENER
Yes

WITH SWIVEL SPOUT
with Fixed Spout

WITH WATER FLOW AERATOR
No

CONNECTIONS / FITTINGS
2 1/2" 400mm flexipipe connection

DECK HOLE DRILL DIAMETER
35mm

SPARE PARTS
Ceramic cartridge C-001-A30

STYLE
Round, Lever Handles

tel: 01934 744466
email: sales@vado.com
www.vado.com

WHERE INSPIRATION FLOWS
TAPS | SHOWERS | FURNITURE
VADO

SPECIFICATION SHEET

COLLECTION: SAFARI
PRODUCT CODE: SAF-100E/SB-CP

NOTES

Cold-start technology

tel: 01934 744466
email: sales@vado.com
www.vado.com

WHERE INSPIRATION FLOWS

TAPS | SHOWERS | FURNITURE

VADO

TECHNICAL DRAWING

COLLECTION: SAFARI
PRODUCT CODE: SAF-100E/SB-CP

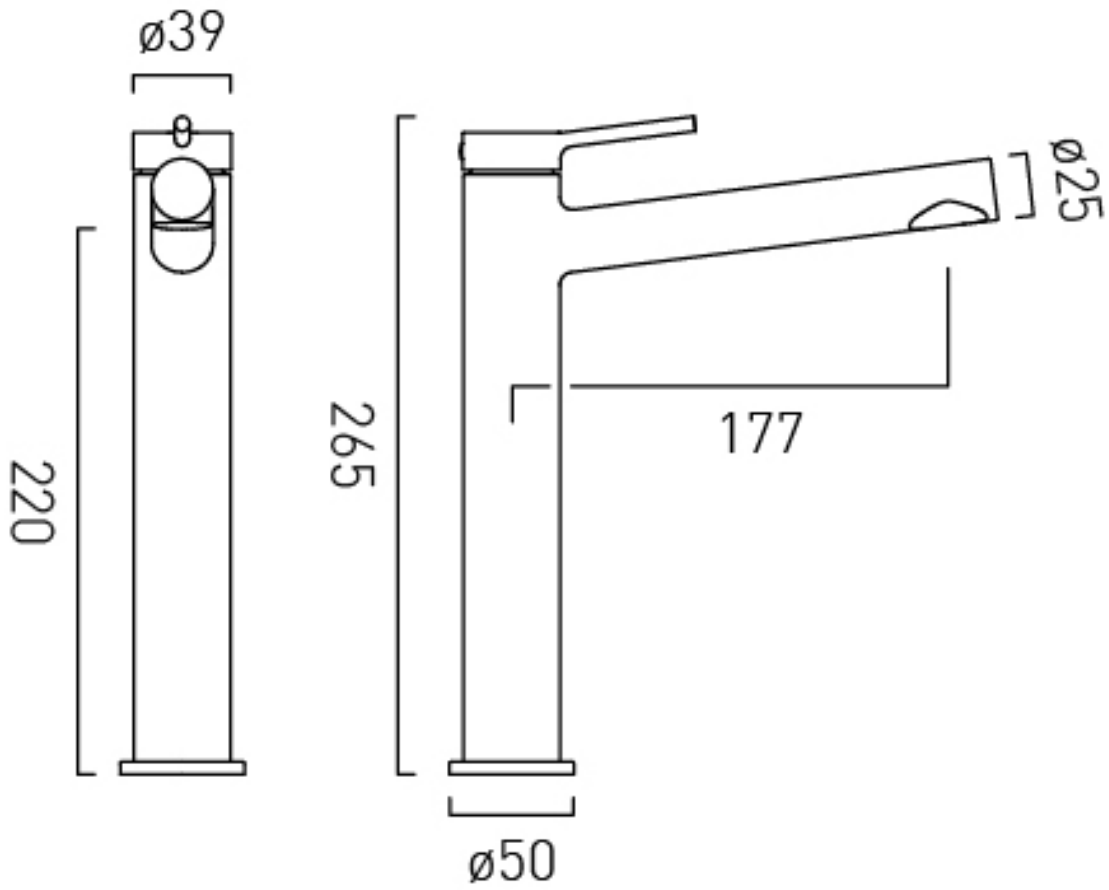

tel: 01934 744466
email: sales@vado.com
www.vado.com

WHERE INSPIRATION FLOWS
TAPS | SHOWERS | FURNITURE

VADO