# SPECIFICATION SHEET

## COLLECTION: SAFARI
## PRODUCT CODE: SAF-200/SB-CP



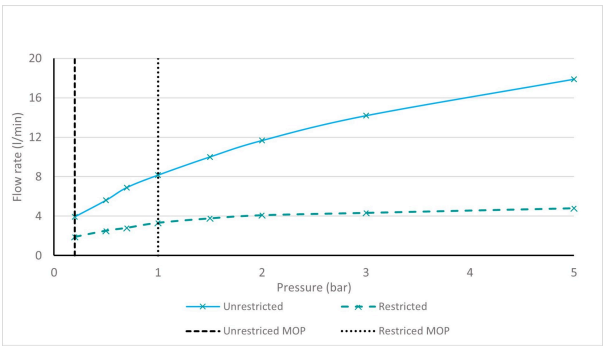


The flow rate displayed is calculated using ideal system conditions. This result should only be taken as an indication as the flow rate may vary depending on the specific in-situ configuration.

### TAP TYPE
Basin Mixer Taps

### FINISH
Chrome

### COLLECTION NAME
Safari

### GUARANTEE
15 Year Guarantee

### BASIN MIXER SIZE
Mono Basin Mixer

### PLUMBING SYSTEM SUITABILITY
Pumped System, Combination Boiler, Pressurised System

### MINIMUM OPERATING PRESSURE
1.0 Bar MP

### MAXIMUM OPERATING PRESSURE
5.0 Bar HP

### MATERIAL
Brass

tel: 01934 744466
email: sales@vado.com
www.vado.com

WHERE INSPIRATION FLOWS
TAPS | SHOWERS | FURNITURE

# SPECIFICATION SHEET

## COLLECTION: SAFARI
## PRODUCT CODE: SAF-200/SB-CP

MOUNTING

Deck Mounted

WASTE

None (Smooth Bodied)

RECOMMENDED FLOW REGULATOR

5L/min flow regulator fitted as standard

WITH ECOTURN COLD START TECHNOLOGY

No

WITH WATER FLOW STRAIGHTENER

Yes

WITH SWIVEL SPOUT

with Fixed Spout

WITH WATER FLOW AERATOR

No

CONNECTIONS / FITTINGS

2 1/2" 450mm flexipipe connection

DECK HOLE DRILL DIAMETER

35mm

SPARE PARTS

Ceramic cartridge C-001-A30

STYLE

Round

NOTES

Cold-start technology

tel: 01934 744466
email: sales@vado.com
www.vado.com

WHERE INSPIRATION FLOWS
TAPS | SHOWERS | FURNITURE

VADO

# TECHNICAL DRAWING

COLLECTION: SAFARI
PRODUCT CODE: SAF-200/SB-CP

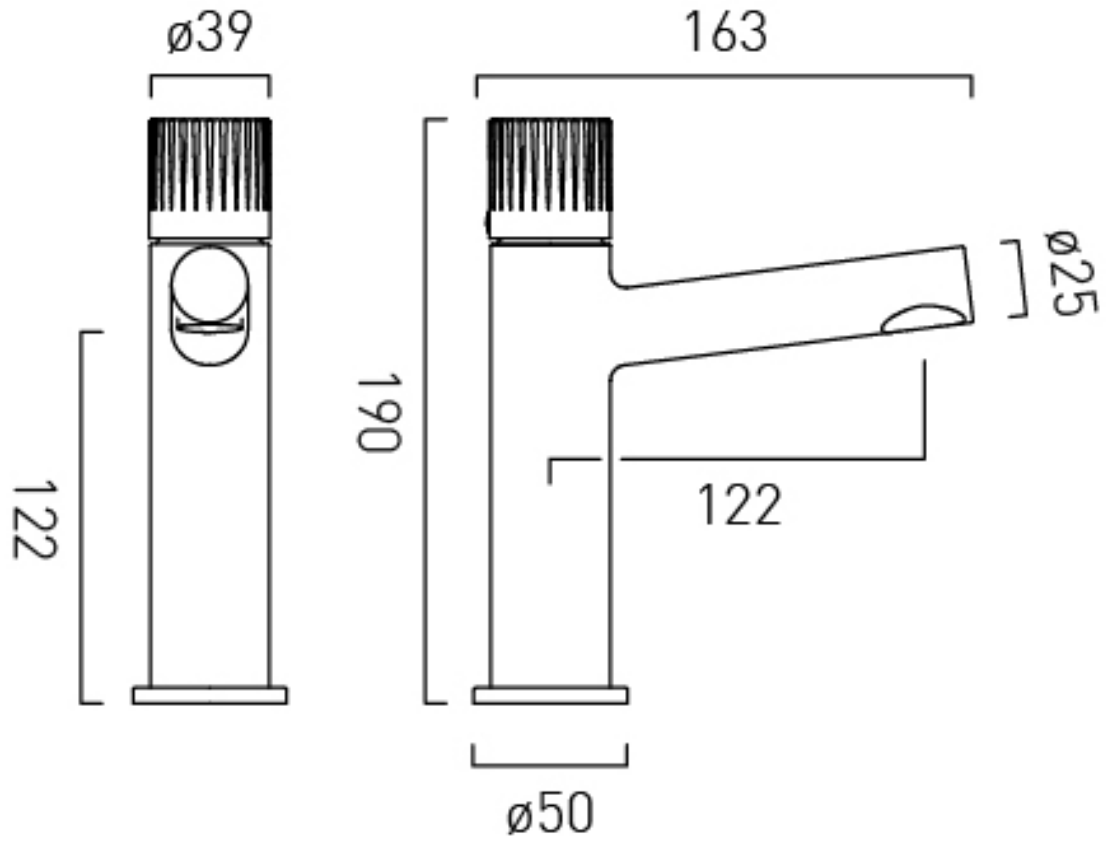


tel: 01934 744466
email: sales@vado.com
www.vado.com

WHERE INSPIRATION FLOWS
TAPS | SHOWERS | FURNITURE

VADO