SPECIFICATION SHEET

COLLECTION: SAFARI
PRODUCT CODE: SAF-M5W-REC-P+GL-SBR



COLLECTION NAME
Safari

FINISH
Satin Brass

GUARANTEE
6 Year Guarantee

KIT COMPRISES
1 x LED Mirror, 2 x Pendant Lights

POWER SOURCE
Mains Powered

LIGHTING MATERIALS
Braided Cable, Metal Light Housing, Frosted Plastic Light Cover

MIRROR SIZE
500mm (w) x 700mm (h)

PENDANT SIZE
120mm

CABLE LENGTH
Adjustable (Max Drop 2m)

tel: 01934 744466
email: sales@vado.com
www.vado.com

WHERE INSPIRATION FLOWS
TAPS | SHOWERS | FURNITURE

SPECIFICATION SHEET

COLLECTION: SAFARI
PRODUCT CODE: SAF-M5W-REC-P+GL-SBR

CABLE COLOUR

Black

CEILING ROSE DIAMETER

80mm

LIGHTING TECHNOLOGY

Tunable/Dimmable Integrated LEDs (long-life, bulb change not required)

LUMENS

685

LIGHTING COLOUR TEMPERATURE

2700k to 6500k

CONNECTIONS / FITTINGS

Pendant lights: spring clips

TURN OFF TIMER

30 minute demister auto timer

IP RATING

IP44

ENERGY CLASS

E

MAX WATTAGE

5W

tel: 01934 744466
email: sales@vado.com
www.vado.com

WHERE INSPIRATION FLOWS
TAPS | SHOWERS | FURNITURE

VADO

TECHNICAL DRAWING

COLLECTION: SAFARI
PRODUCT CODE: SAF-M5W-REC-P+GL-SBR

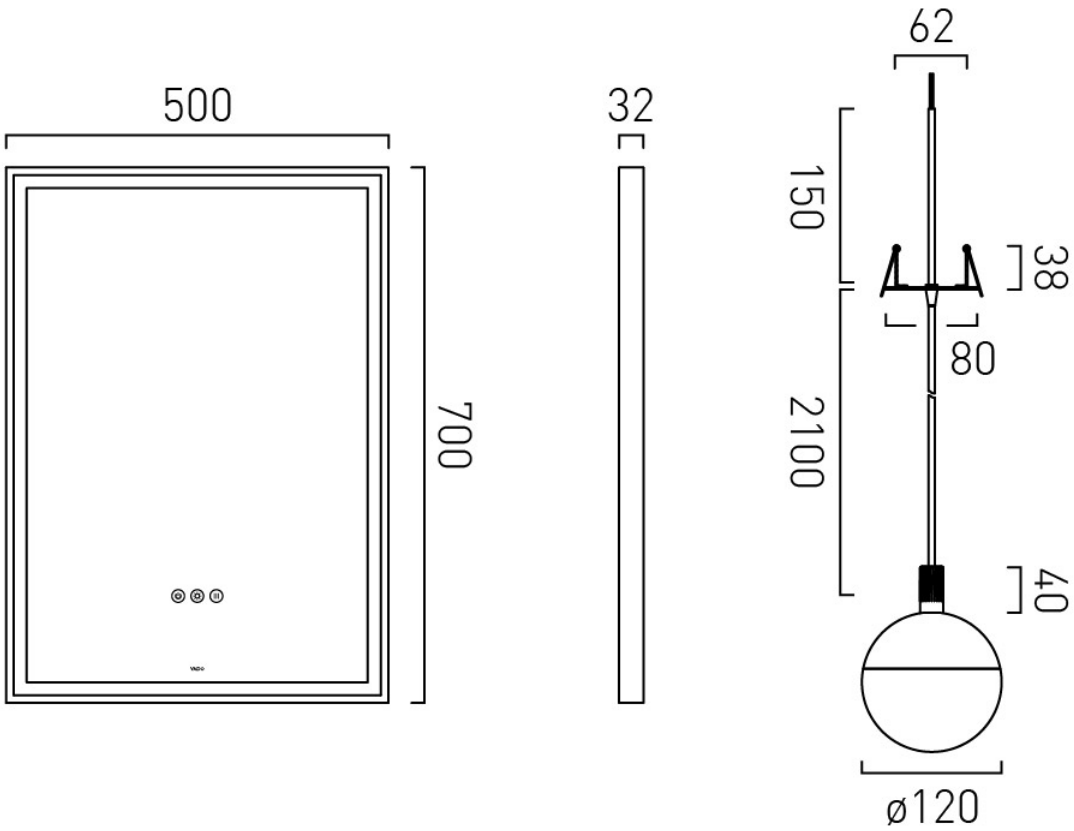

tel: 01934 744466
email: sales@vado.com
www.vado.com

WHERE INSPIRATION FLOWS
TAPS | SHOWERS | FURNITURE

VADO