SPECIFICATION SHEET

COLLECTION: SAFARI
PRODUCT CODE: SAF-F500WH-F-AW



WINNER
Ideal Home AWARDS 2026
BATHROOM

COLLECTION NAME
Safari

FURNITURE TYPE
Vanity Unit

FINISH
Arctic White

VANITY WIDTH
500mm

MOUNTING
Wall Hung

DRAWERS
2 Drawers

GUARANTEE
6 Year Guarantee

BASIN SUITABILITY
Safari, 500mm Basins

MATERIAL
FSC-Certified Wood

tel: 01934 744466
email: sales@vado.com
www.vado.com

WHERE INSPIRATION FLOWS
TAPS | SHOWERS | FURNITURE

VADO

SPECIFICATION SHEET

COLLECTION: SAFARI
PRODUCT CODE: SAF-F500WH-F-AW

FIXING LOCATION

100mm from top of the unit. Height adjustable wall brackets

SPACE SAVING SOLUTION

Bottle trap cutout in top drawer

tel: 01934 744466
email: sales@vado.com
www.vado.com

WHERE INSPIRATION FLOWS

TAPS | SHOWERS | FURNITURE

VADO

TECHNICAL DRAWING

COLLECTION: SAFARI
PRODUCT CODE: SAF-F500WH-F-AW

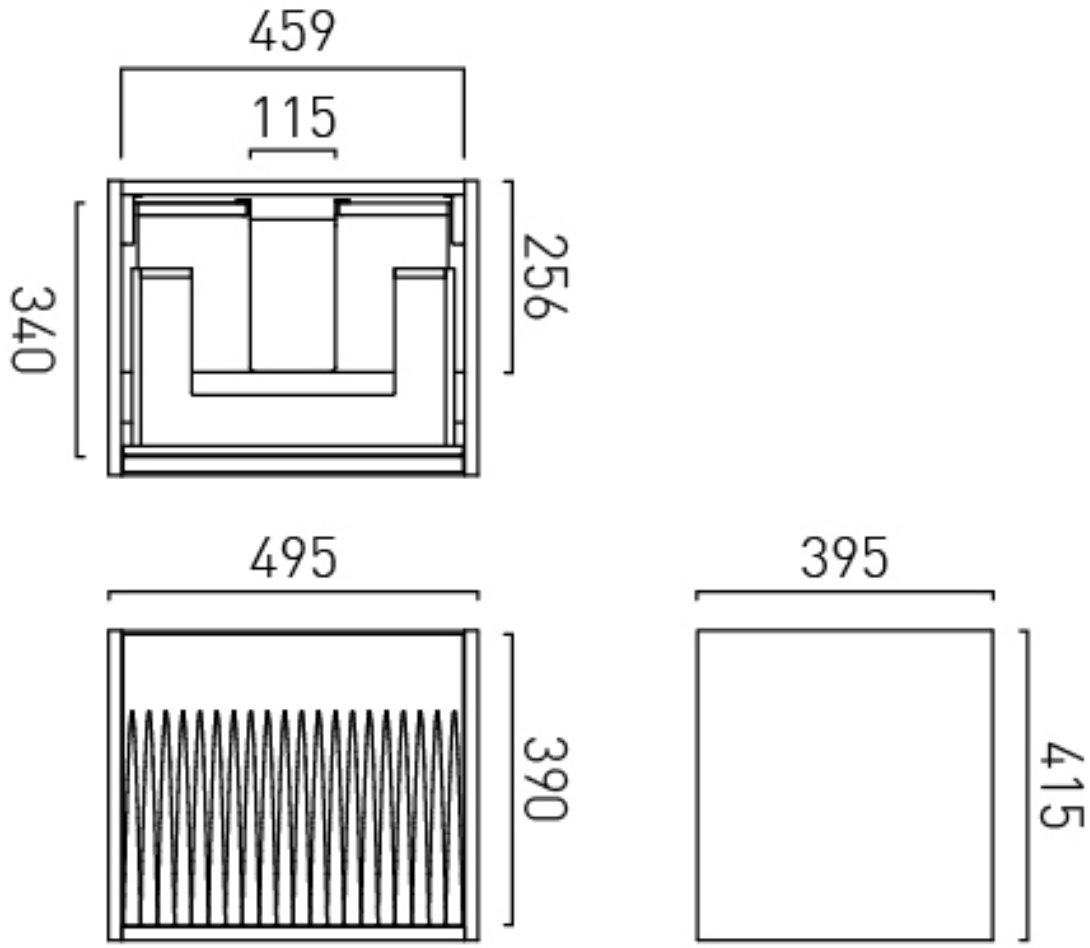

tel: 01934 744466
email: sales@vado.com
www.vado.com

WHERE INSPIRATION FLOWS
TAPS | SHOWERS | FURNITURE

VADO