SPECIFICATION SHEET

COLLECTION: SAFARI
PRODUCT CODE: SAF-BM6-AW



COLLECTION NAME
Safari

FURNITURE TYPE
Inset Basin

BASIN TYPE
Inset Basin

BASIN WIDTH
600mm

FINISH
Arctic White

SIZE
592mm

BASIN MATERIAL
Mineral Cast

TAP HOLES
1 Hole

GUARANTEE
6 Year Guarantee

tel: 01934 744466
email: sales@vado.com
www.vado.com

WHERE INSPIRATION FLOWS
TAPS | SHOWERS | FURNITURE

SPECIFICATION SHEET

COLLECTION: SAFARI
PRODUCT CODE: SAF-BM6-AW

OVERFLOW

Yes (Overflow Cover Not Included)

OVERFLOW COVER REQUIRED

Required: CAM-BMO

REPAIR KIT INCLUDED

Yes

tel: 01934 744466
email: sales@vado.com
www.vado.com

WHERE INSPIRATION FLOWS

TAPS | SHOWERS | FURNITURE

VADO

TECHNICAL DRAWING

COLLECTION: SAFARI
PRODUCT CODE: SAF-BM6-AW

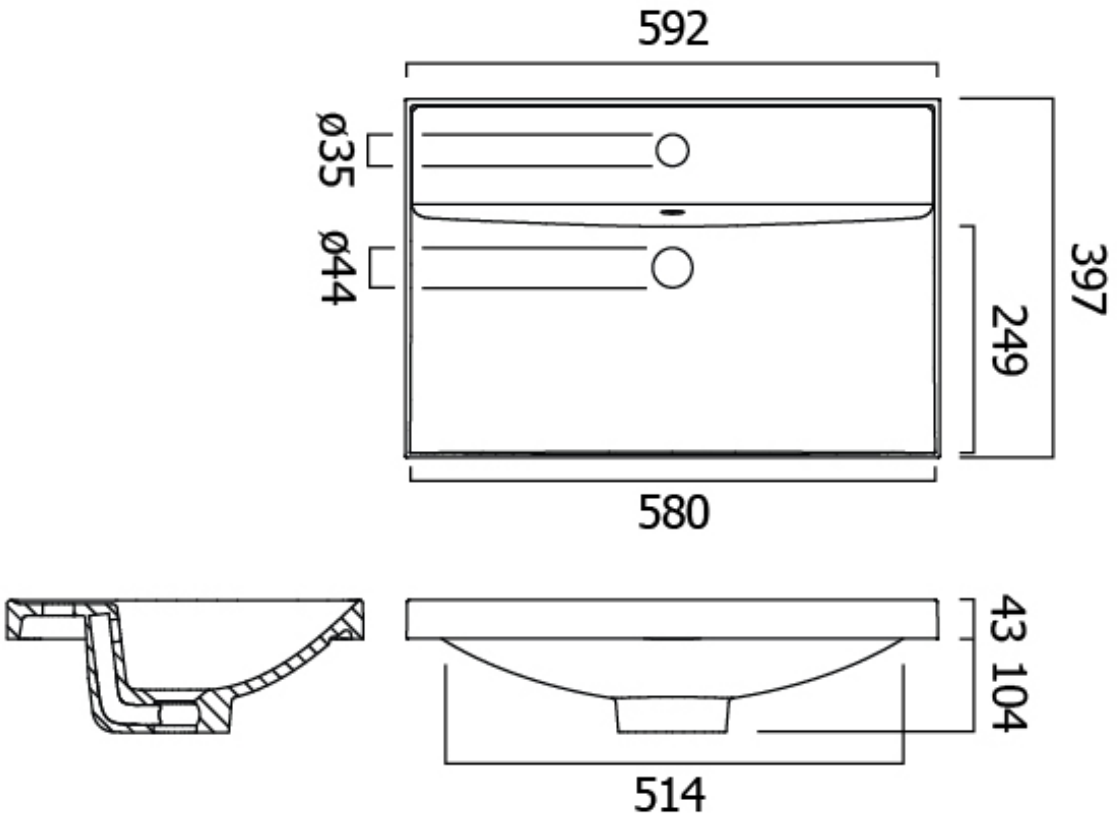

tel: 01934 744466
email: sales@vado.com
www.vado.com

WHERE INSPIRATION FLOWS
TAPS | SHOWERS | FURNITURE

VADO