SPECIFICATION SHEET

COLLECTION: WASTES & FITTINGS
PRODUCT CODE: WG-395-C/P



COLLECTION NAME

Wastes & Fittings

FINISH

Chrome

GUARANTEE

15 Year Guarantee

TAP TYPE

Wastes and Fittings

PLUMBING SYSTEM SUITABILITY

Pressurised System

NOTES

easily converts into a slotted or unslotted waste
clic-clac or free-flow

tel: 01934 744466
email: sales@vado.com
www.vado.com

WHERE INSPIRATION FLOWS
TAPS | SHOWERS | FURNITURE

VADO

TECHNICAL DRAWING

COLLECTION: WASTES & FITTINGS
PRODUCT CODE: WG-395-C/P

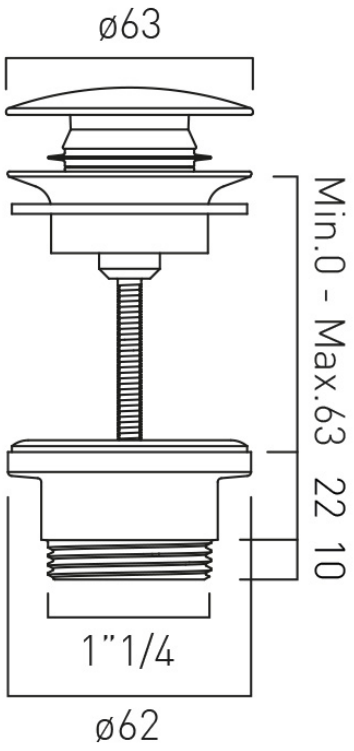

tel: 01934 744466
email: sales@vado.com
www.vado.com

WHERE INSPIRATION FLOWS
TAPS | SHOWERS | FURNITURE

VADO