SPECIFICATION SHEET

COLLECTION: SAFARI
PRODUCT CODE: SAF-BC5-GW



FINISH
Gloss White

COLLECTION NAME
Safari

GUARANTEE
25 Year Guarantee

FURNITURE TYPE
Inset Basin

BASIN TYPE
Inset Basin

SIZE
500mm

SIZE
507mm

BASIN MATERIAL
Ceramic

TAP HOLES
1 Hole

tel: 01934 744466
email: sales@vado.com
www.vado.com

WHERE INSPIRATION FLOWS
TAPS | SHOWERS | FURNITURE

SPECIFICATION SHEET

COLLECTION: SAFARI
PRODUCT CODE: SAF-BC5-GW

OVERFLOW

Yes (Overflow Cover Not Included)

OVERFLOW COVER REQUIRED

Optional

tel: 01934 744466
email: sales@vado.com
www.vado.com

WHERE INSPIRATION FLOWS

TAPS | SHOWERS | FURNITURE

VADO

TECHNICAL DRAWING

COLLECTION: SAFARI
PRODUCT CODE: SAF-BC5-GW

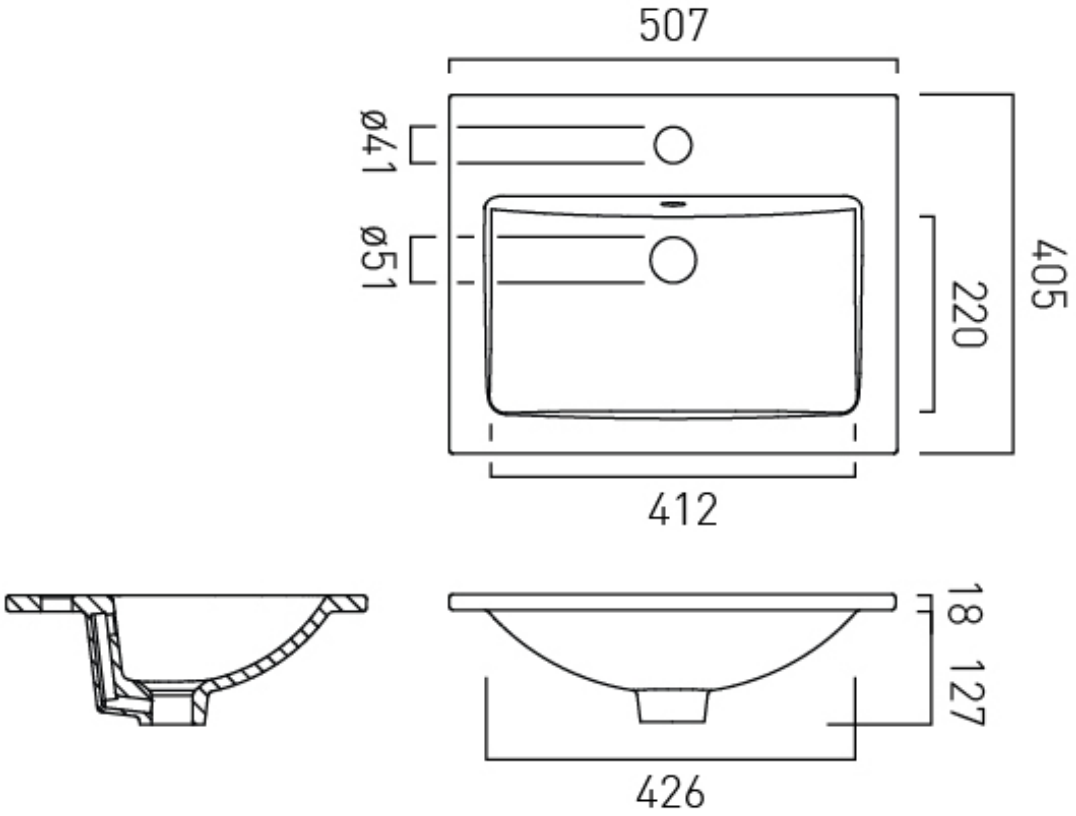

tel: 01934 744466
email: sales@vado.com
www.vado.com

WHERE INSPIRATION FLOWS
TAPS | SHOWERS | FURNITURE

VADO