SPECIFICATION SHEET

COLLECTION: SAFARI
PRODUCT CODE: SAF-BMSQ-S-GW



COLLECTION NAME
Safari

FURNITURE TYPE
Countertop Basin

BASIN TYPE
Rectangle Countertop

FINISH
Gloss White

SIZE
430mm

BASIN MATERIAL
Mineral Cast

GUARANTEE
6 Year Guarantee

OVERFLOW
No (Undrilled)

tel: 01934 744466
email: sales@vado.com
www.vado.com

WHERE INSPIRATION FLOWS
TAPS | SHOWERS | FURNITURE

TECHNICAL DRAWING

COLLECTION: SAFARI
PRODUCT CODE: SAF-BMSQ-S-GW

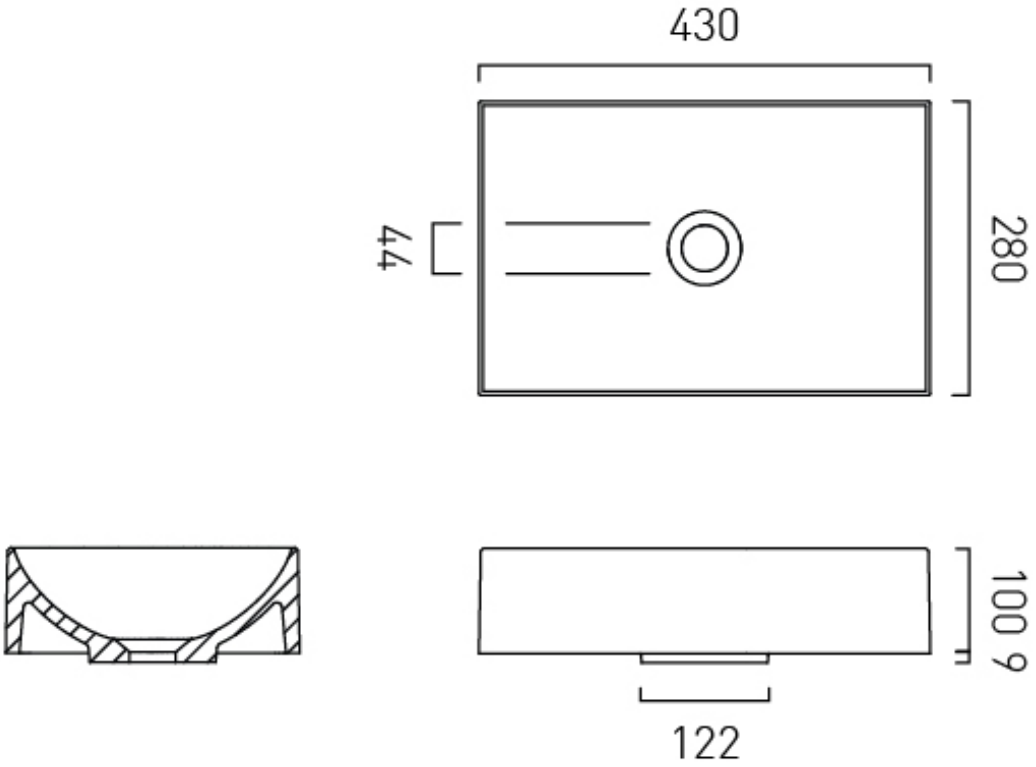

tel: 01934 744466
email: sales@vado.com
www.vado.com

WHERE INSPIRATION FLOWS
TAPS | SHOWERS | FURNITURE

VADO