SPECIFICATION SHEET

COLLECTION: SAFARI
PRODUCT CODE: SAF-F800WH-S-CA



COLLECTION NAME
Safari

FURNITURE TYPE
Vanity Unit

FINISH
Cashmere

VANITY WIDTH
800mm

MOUNTING
Wall Hung

DRAWERS
2 Drawers

GUARANTEE
6 Year Guarantee

BASIN SUITABILITY
Safari, 800mm Basins

MATERIAL
FSC-Certified Wood

tel: 01934 744466
email: sales@vado.com
www.vado.com

WHERE INSPIRATION FLOWS
TAPS | SHOWERS | FURNITURE

SPECIFICATION SHEET

COLLECTION: SAFARI
PRODUCT CODE: SAF-F800WH-S-CA

FIXING LOCATION

100mm from top of unit

SPACE SAVING SOLUTION

Bottle trap cutout in top drawer

NOTES

Height adjustable wall brackets

tel: 01934 744466
email: sales@vado.com
www.vado.com

WHERE INSPIRATION FLOWS
TAPS | SHOWERS | FURNITURE

VADO

TECHNICAL DRAWING

COLLECTION: SAFARI
PRODUCT CODE: SAF-F800WH-S-CA

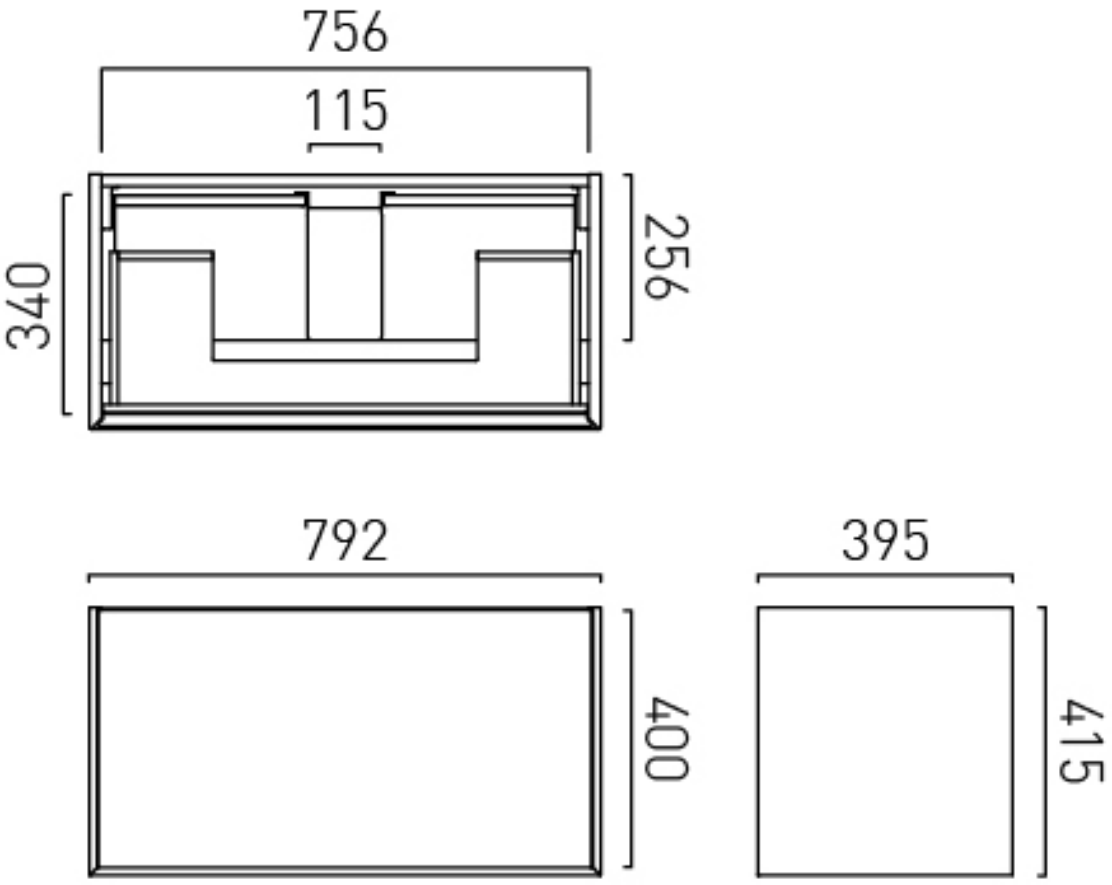

tel: 01934 744466
email: sales@vado.com
www.vado.com

WHERE INSPIRATION FLOWS
TAPS | SHOWERS | FURNITURE

VADO