# SPECIFICATION SHEET

## COLLECTION: SAFARI
## PRODUCT CODE: SAF-F600FM-S-CA



WINNER
Ideal Home AWARDS 2026
BATHROOM

**COLLECTION NAME**
Safari

**FINISH**
Cashmere

**GUARANTEE**
6 Year Guarantee

**FURNITURE TYPE**
Vanity Unit

**MOUNTING**
Floor Mounted

**SIZE**
600mm

**DRAWERS**
2 Drawers

**BASIN SUITABILITY**
Safari, 600mm Basins

**MATERIAL**
FSC-Certified Wood

tel: 01934 744466
email: sales@vado.com
www.vado.com

WHERE INSPIRATION FLOWS
TAPS | SHOWERS | FURNITURE

VADO

# SPECIFICATION SHEET

## COLLECTION: SAFARI
## PRODUCT CODE: SAF-F600FM-S-CA

### FIXING LOCATION

100mm from top of the unit. Height adjustable wall brackets

### SPACE SAVING SOLUTION

Bottle trap cutout in top drawer

tel: 01934 744466
email: sales@vado.com
www.vado.com

WHERE INSPIRATION FLOWS

TAPS | SHOWERS | FURNITURE

VADO

# TECHNICAL DRAWING

COLLECTION: SAFARI
PRODUCT CODE: SAF-F600FM-S-CA

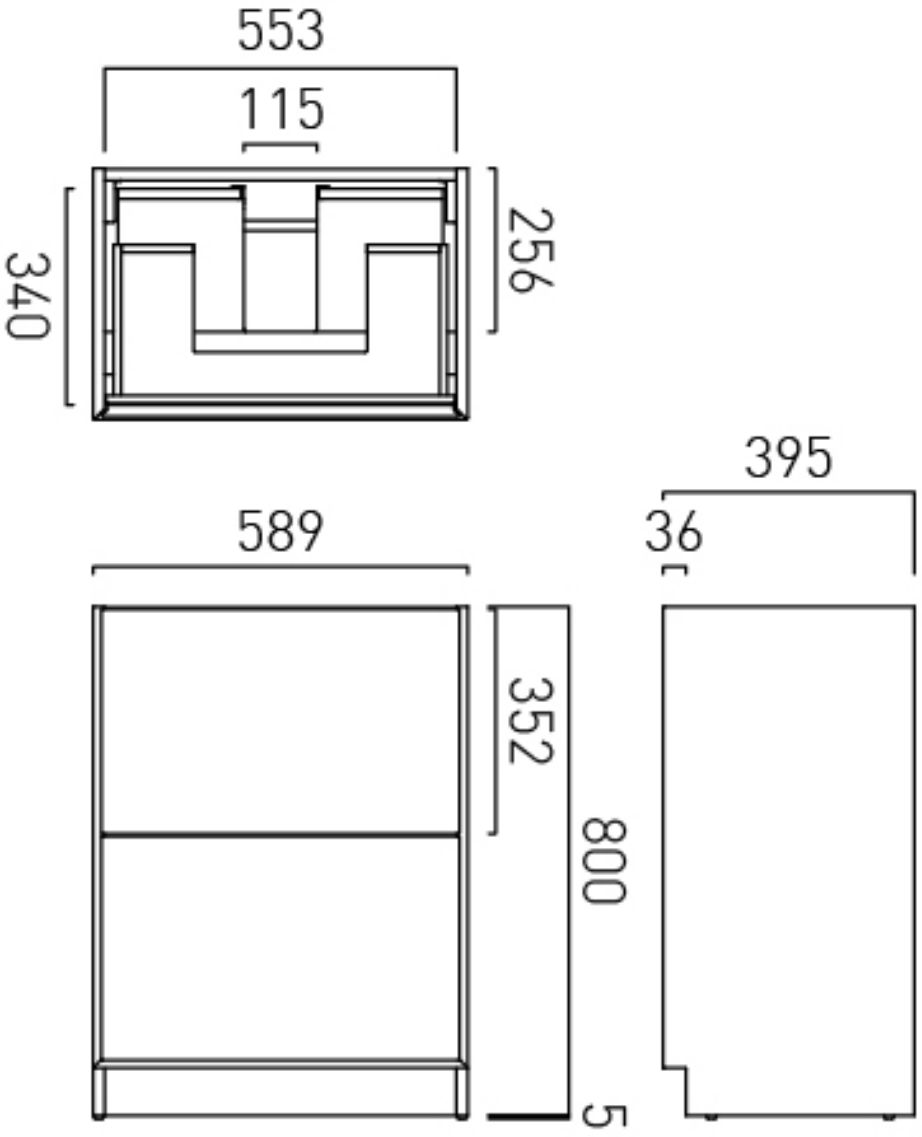


tel: 01934 744466
email: sales@vado.com
www.vado.com

WHERE INSPIRATION FLOWS
TAPS | SHOWERS | FURNITURE

VADO