SPECIFICATION SHEET

COLLECTION: SAFARI
PRODUCT CODE: SAF-F400WHL-S-CG



COLLECTION NAME
Safari

FURNITURE TYPE
Vanity Unit

FINISH
Charcoal Grey

VANITY WIDTH
400mm

MOUNTING
Wall Hung

DOORS
Left Pull, Right Hinge

GUARANTEE
6 Year Guarantee

BASIN SUITABILITY
Safari, 400mm Basins

MATERIAL
FSC-Certified Wood

tel: 01934 744466
email: sales@vado.com
www.vado.com

WHERE INSPIRATION FLOWS
TAPS | SHOWERS | FURNITURE

SPECIFICATION SHEET

COLLECTION: SAFARI
PRODUCT CODE: SAF-F400WHL-S-CG

SPACE SAVING SOLUTION

Reduced depth units for space saving, 50mm pipe void

NOTES

Height adjustable wall brackets

tel: 01934 744466
email: sales@vado.com
www.vado.com

WHERE INSPIRATION FLOWS

TAPS | SHOWERS | FURNITURE

VADO

TECHNICAL DRAWING

COLLECTION: SAFARI
PRODUCT CODE: SAF-F400WHL-S-CG

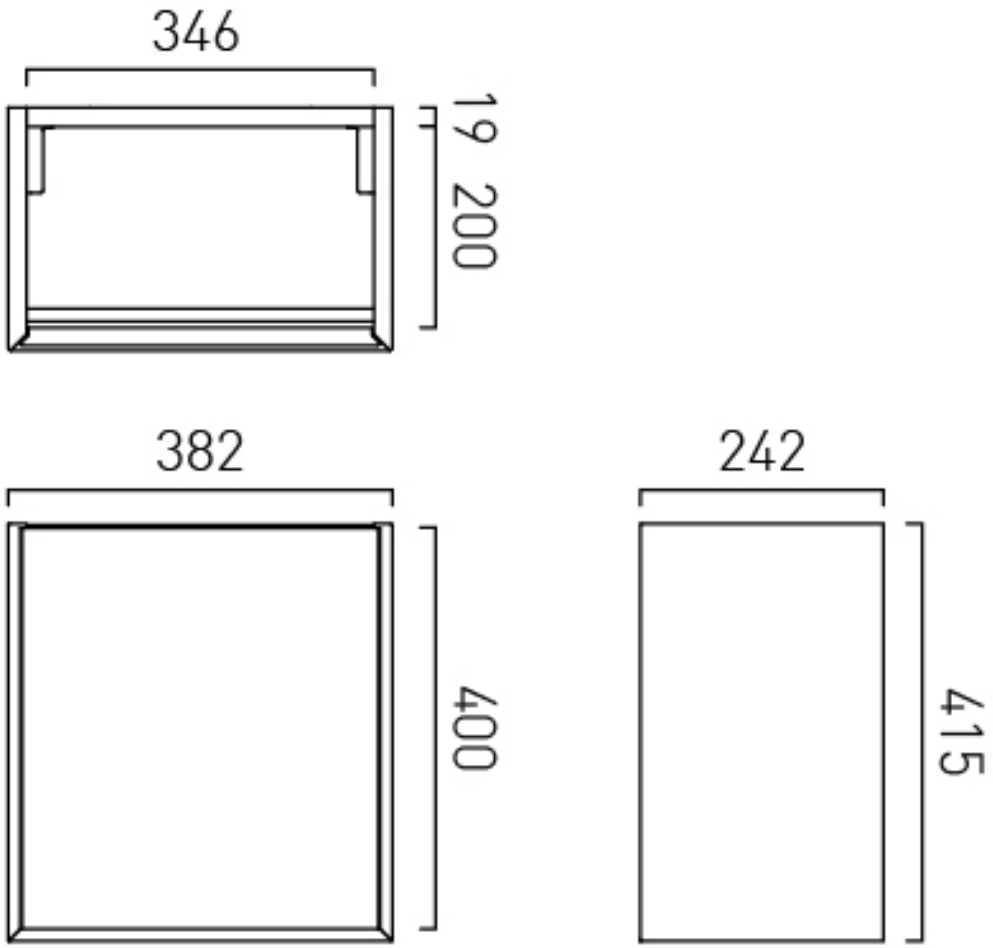

tel: 01934 744466
email: sales@vado.com
www.vado.com

WHERE INSPIRATION FLOWS
TAPS | SHOWERS | FURNITURE

VADO