SPECIFICATION SHEET

COLLECTION: SAFARI
PRODUCT CODE: SAF-HANT-PEW



FINISH
Pewter

COLLECTION NAME
Safari

GUARANTEE
6 Year Guarantee

FURNITURE TYPE
Handle

HANDLE TYPE
Top Mounted

STYLE
Round, Contemporary

tel: 01934 744466
email: sales@vado.com
www.vado.com

WHERE INSPIRATION FLOWS
TAPS | SHOWERS | FURNITURE

VADO

TECHNICAL DRAWING

COLLECTION: SAFARI
PRODUCT CODE: SAF-HANT-PEW

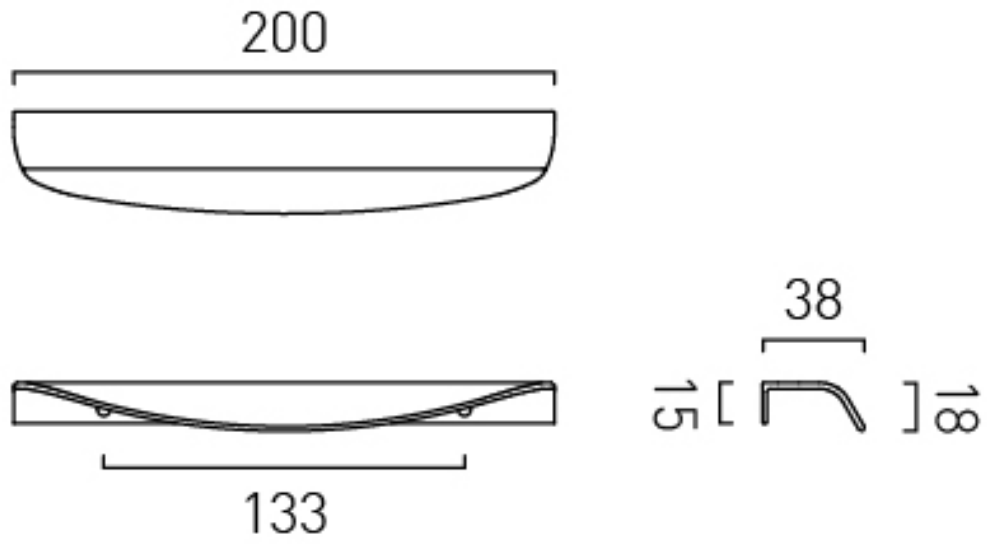

tel: 01934 744466
email: sales@vado.com
www.vado.com

WHERE INSPIRATION FLOWS
TAPS | SHOWERS | FURNITURE

VADO