SPECIFICATION SHEET

COLLECTION: ZOO
PRODUCT CODE: ZOO-181-CP

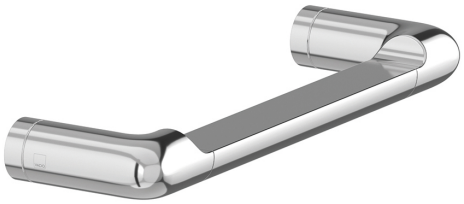

COLLECTION NAME
Zoo

FINISH
Chrome

GUARANTEE
15 Year Guarantee

KIT COMPRISES
1 x Towel Bar

ACCESSORY TYPE
Towel Rail

MATERIAL
Brass

MOUNTING
Wall Mounted

STYLE
Round

tel: 01934 744466
email: sales@vado.com
www.vado.com

WHERE INSPIRATION FLOWS
TAPS | SHOWERS | FURNITURE

TECHNICAL DRAWING

COLLECTION: ZOO
PRODUCT CODE: ZOO-181-CP

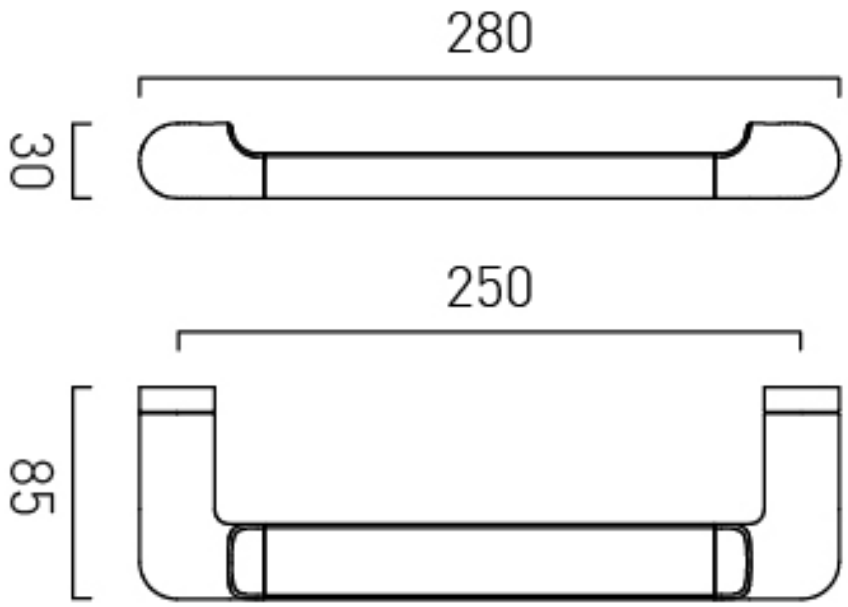

tel: 01934 744466
email: sales@vado.com
www.vado.com

WHERE INSPIRATION FLOWS
TAPS | SHOWERS | FURNITURE

VADO