SPECIFICATION SHEET

COLLECTION: NEBULA
PRODUCT CODE: IND-RO/25-BRZ

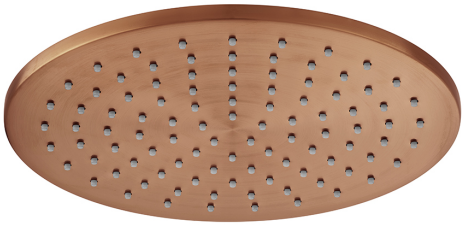

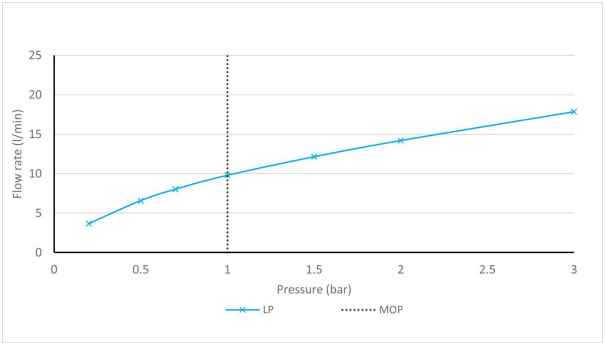

The flow rate displayed is calculated using ideal system conditions. This result should only be taken as an indication as the flow rate may vary depending on the specific in-situ configuration.

SHOWER TYPE
Shower Head

PLUMBING SYSTEM SUITABILITY
Gravity System, Pumped System, Combination Boiler, Pressurised System

MOUNTING
Wall Mounted

STYLE
Round

CONNECTIONS / FITTINGS
1/2" female inlet

WITH AIR-INJECTION TECHNOLOGY
No

FUNCTIONS
Single Function

RUB-CLEAN NOZZLES
Yes

SELF-CLEANING
No

tel: 01934 744466
email: sales@vado.com
www.vado.com

WHERE INSPIRATION FLOWS

TAPS | SHOWERS | FURNITURE

VADO

SPECIFICATION SHEET

COLLECTION: NEBULA
PRODUCT CODE: IND-RO/25-BRZ

WITH SHOWER ARM

None

SHOWER HEAD SIZE

250mm (10") diameter

MATERIAL

Brass

COLLECTION NAME

Nebula

FINISH

Brushed Bronze

MINIMUM OPERATING PRESSURE

0.2 Bar LP

GUARANTEE

15 Year Guarantee

tel: 01934 744466
email: sales@vado.com
www.vado.com

WHERE INSPIRATION FLOWS
TAPS | SHOWERS | FURNITURE

VADO

TECHNICAL DRAWING

COLLECTION: NEBULA
PRODUCT CODE: IND-RO/25-BRZ

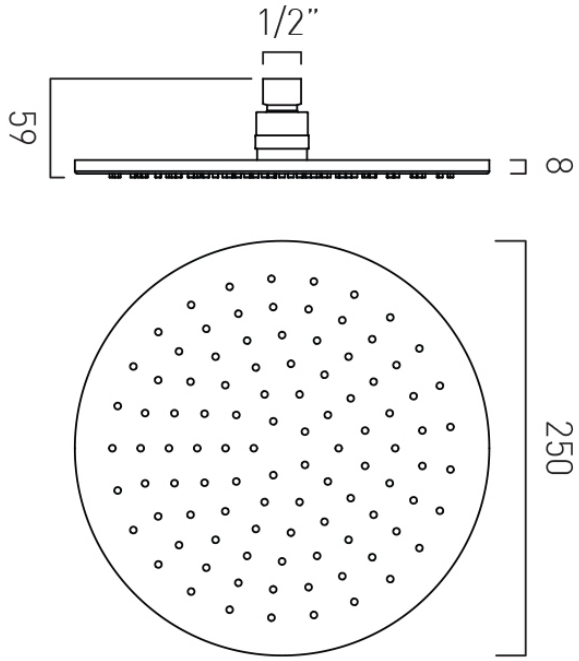

tel: 01934 744466
email: sales@vado.com
www.vado.com

WHERE INSPIRATION FLOWS
TAPS | SHOWERS | FURNITURE

VADO