SPECIFICATION SHEET

COLLECTION: ELEMENTS
PRODUCT CODE: IND-ELW237-BRG



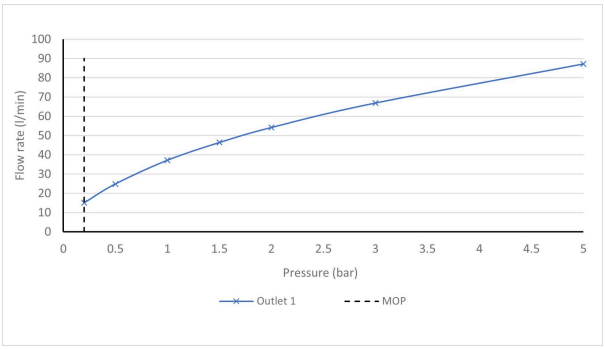

The flow rate displayed is calculated using ideal system conditions. This result should only be taken as an indication as the flow rate may vary depending on the specific in-situ configuration.

TAP TYPE
Bath Fillers

PLUMBING SYSTEM SUITABILITY
Gravity System

HANDLES
2 Handle

MATERIAL
Brass

MOUNTING
Deck Mounted

WITH WATER FLOW STRAIGHTENER
No

WITH SWIVEL SPOUT
with Fixed Spout

CONNECTIONS / FITTINGS
2 x 3/4" 48mm threaded inlet connections

DECK HOLE DRILL DIAMETER
28-30mm

tel: 01934 744466
email: sales@vado.com
www.vado.com

WHERE INSPIRATION FLOWS

TAPS | SHOWERS | FURNITURE

VADO

SPECIFICATION SHEET

COLLECTION: ELEMENTS
PRODUCT CODE: IND-ELW237-BRG

MINIMUM OPERATING PRESSURE

0.2 Bar LP

SPARE PARTS

Cold ceramic cartridge C-302-RTC, Hot ceramic cartridge C-302-LTC

STYLE

Round

FINISH

Brushed Gold

COLLECTION NAME

Elements

GUARANTEE

15 Year Guarantee

tel: 01934 744466
email: sales@vado.com
www.vado.com

WHERE INSPIRATION FLOWS
TAPS | SHOWERS | FURNITURE

VADO

TECHNICAL DRAWING

COLLECTION: ELEMENTS
PRODUCT CODE: IND-ELW237-BRG

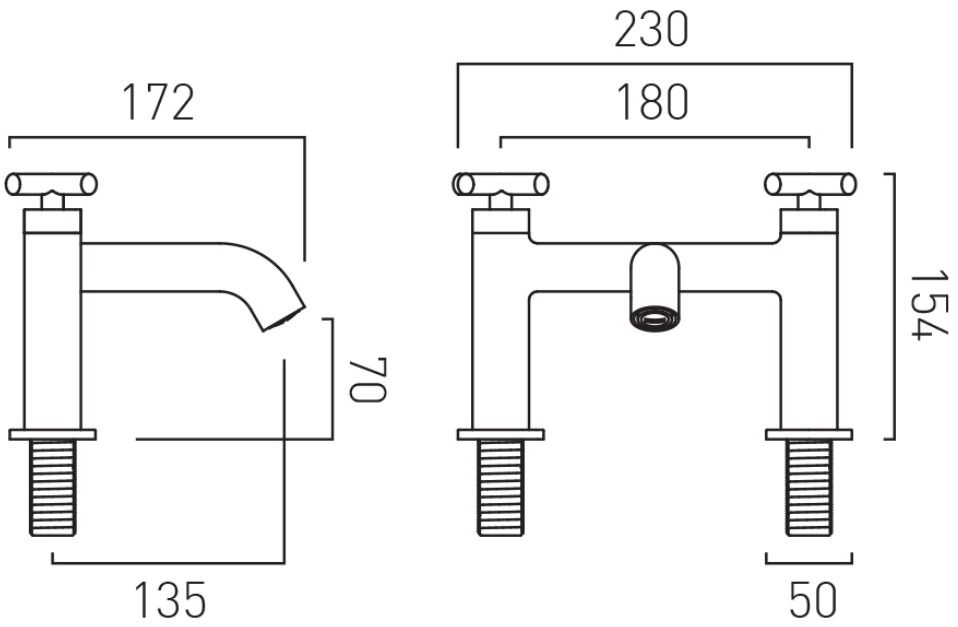

tel: 01934 744466
email: sales@vado.com
www.vado.com

WHERE INSPIRATION FLOWS
TAPS | SHOWERS | FURNITURE

VADO