SPECIFICATION SHEET

COLLECTION: CAMEO
PRODUCT CODE: WG-461/RO-SBR



FINISH
Satin Brass

COLLECTION NAME
Cameo

GUARANTEE
10 Year Guarantee

TAP TYPE
Wastes and Fittings

PLUMBING SYSTEM SUITABILITY
Pressurised System

CONNECTIONS / FITTINGS
35mm x 300mm pipe connections

INSTALLATION TOLERANCES
min-max vertical adjustment 40-150mm to outlet centre

STYLE
Round

tel: 01934 744466
email: sales@vado.com
www.vado.com

WHERE INSPIRATION FLOWS
TAPS | SHOWERS | FURNITURE

VADO

TECHNICAL DRAWING

COLLECTION: CAMEO
PRODUCT CODE: WG-461/RO-SBR

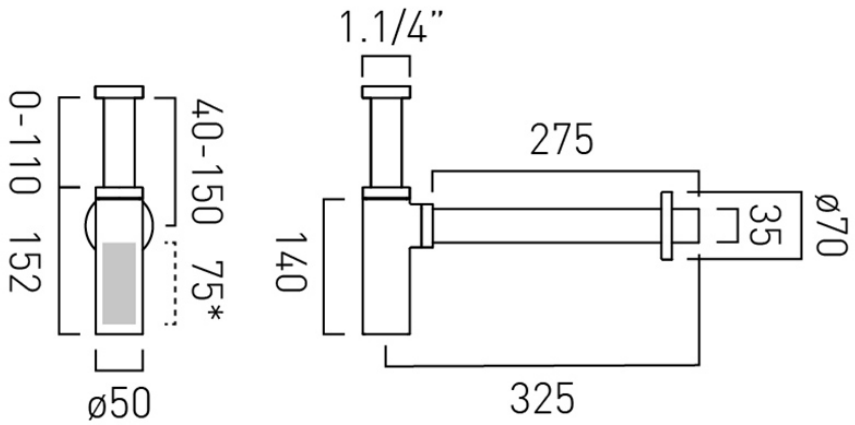

*75mm water trap seal

tel: 01934 744466
email: sales@vado.com
www.vado.com

WHERE INSPIRATION FLOWS
TAPS | SHOWERS | FURNITURE

VADO