SPECIFICATION SHEET

COLLECTION: CAMEO
PRODUCT CODE: CAM-148D/2-MW



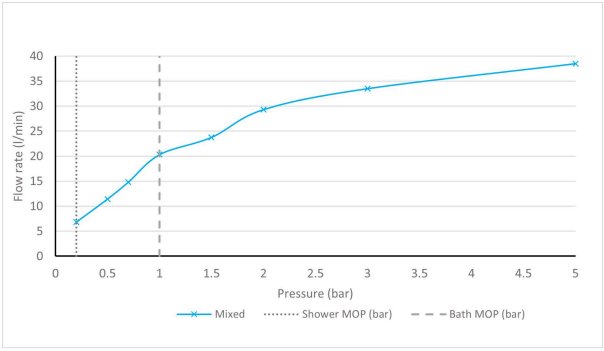

The flow rate displayed is calculated using ideal system conditions. This result should only be taken as an indication as the flow rate may vary depending on the specific in-situ configuration.

SHOWER TYPE
Shower Valve

VALVE TYPE
Concealed

STYLE
Square

ORIENTATION
Vertical

NUMBER OF OUTLETS
2 Outlet

HANDLES
2 Handle

WITH ALL-FLOW FUNCTION
No

WITH INTEGRATED DIVERTER
No

COMPATIBLE WITH STUDFAST
No

tel: 01934 744466
email: sales@vado.com
www.vado.com

WHERE INSPIRATION FLOWS
TAPS | SHOWERS | FURNITURE

VADO

SPECIFICATION SHEET

COLLECTION: CAMEO
PRODUCT CODE: CAM-148D/2-MW

WITH BLEED VALVE FOR SYSTEM FLUSH ON INSTALLATION

Yes

WITH SHOWER KIT

No

OPTIMUM INSTALLATION DEPTH

82mm

INCLUDES MORTAR / TILE GUARD

No

COMPATIBLE WITH EASY-FIX BRACKETS

No

WITH THERMOSTATIC TECHNOLOGY

Yes

MIN-MAX WALL MOUNT

70-95mm

CONNECTIONS / FITTINGS

2 x 3/4" female inlets, 2 x 3/4" female outlets

SPARE PARTS

thermostatic cartridge V-704-34S, diverter cartridge C-803-33X/3X

MOUNTING

Wall Mounted

PLUMBING SYSTEM SUITABILITY

Gravity System, Combination Boiler

COLLECTION NAME

Cameo

tel: 01934 744466
email: sales@vado.com
www.vado.com

WHERE INSPIRATION FLOWS
TAPS | SHOWERS | FURNITURE

VADO

SPECIFICATION SHEET

COLLECTION: CAMEO
PRODUCT CODE: CAM-148D/2-MW

FINISH

Matt White

MINIMUM OPERATING PRESSURE

0.2 Bar LP (Shower) / 1.0 Bar MP (Bath)

GUARANTEE

10 Year Guarantee

tel: 01934 744466
email: sales@vado.com
www.vado.com

WHERE INSPIRATION FLOWS

TAPS | SHOWERS | FURNITURE

VADO

TECHNICAL DRAWING

COLLECTION: CAMEO
PRODUCT CODE: CAM-148D/2-MW

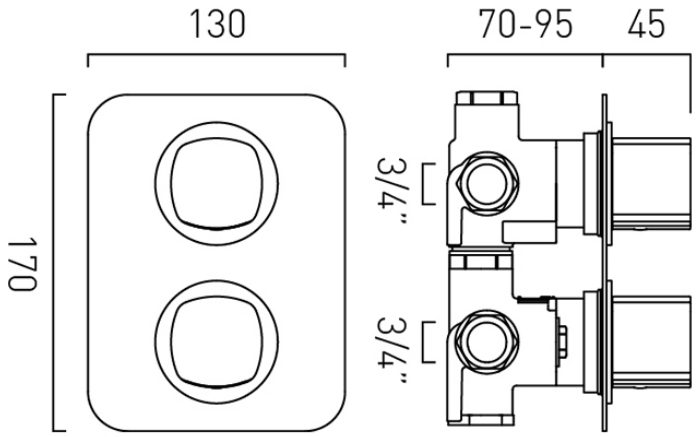

tel: 01934 744466
email: sales@vado.com
www.vado.com

WHERE INSPIRATION FLOWS
TAPS | SHOWERS | FURNITURE

VADO