SPECIFICATION SHEET

COLLECTION: CAMEO
PRODUCT CODE: CAM-149T-MW

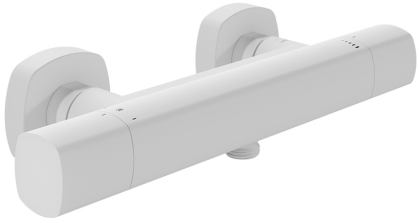

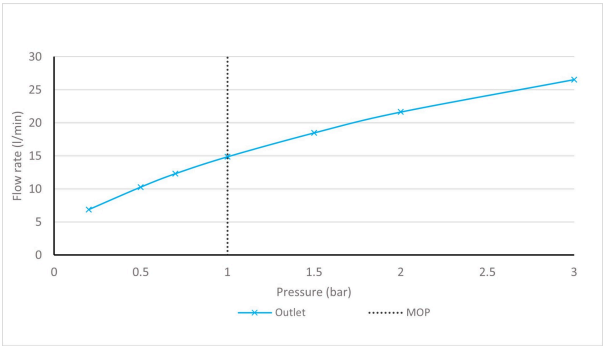

The flow rate displayed is calculated using ideal system conditions. This result should only be taken as an indication as the flow rate may vary depending on the specific in-situ configuration.

SHOWER TYPE
Shower Valve

VALVE TYPE
Exposed

STYLE
Square

ORIENTATION
Horizontal

NUMBER OF OUTLETS
1 Outlet

HANDLES
2 Handle

WITH ALL-FLOW FUNCTION
No

WITH INTEGRATED DIVERTER
No

COMPATIBLE WITH STUDFAST
No

tel: 01934 744466
email: sales@vado.com
www.vado.com

WHERE INSPIRATION FLOWS
TAPS | SHOWERS | FURNITURE

VADO

SPECIFICATION SHEET

COLLECTION: CAMEO
PRODUCT CODE: CAM-149T-MW

WITH BLEED VALVE FOR SYSTEM FLUSH ON INSTALLATION

No

WITH SHOWER KIT

No

INCLUDES MORTAR / TILE GUARD

No

COMPATIBLE WITH EASY-FIX BRACKETS

No

WITH THERMOSTATIC TECHNOLOGY

Yes

CONNECTIONS / FITTINGS

3/4" easy-fit brackets included

SPARE PARTS

thermostatic cartridge V-704-34S, flow cartridge C-303-RTC

MOUNTING

Wall Mounted

PLUMBING SYSTEM SUITABILITY

Combination Boiler

COLLECTION NAME

Cameo

FINISH

Matt White

MINIMUM OPERATING PRESSURE

1.0 Bar MP

tel: 01934 744466
email: sales@vado.com
www.vado.com

SPECIFICATION SHEET

COLLECTION: CAMEO
PRODUCT CODE: CAM-149T-MW

MAXIMUM OPERATING PRESSURE

5.0 Bar HP

GUARANTEE

10 Year Guarantee

tel: 01934 744466
email: sales@vado.com
www.vado.com

WHERE INSPIRATION FLOWS

TAPS | SHOWERS | FURNITURE

VADO

TECHNICAL DRAWING

COLLECTION: CAMEO
PRODUCT CODE: CAM-149T-MW

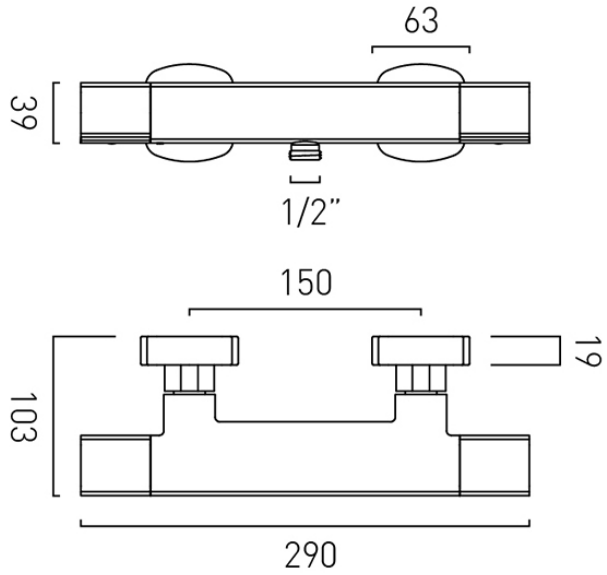

tel: 01934 744466
email: sales@vado.com
www.vado.com

WHERE INSPIRATION FLOWS
TAPS | SHOWERS | FURNITURE

VADO