SPECIFICATION SHEET

COLLECTION: PHOTON
PRODUCT CODE: PHO-100F/SB-C/P



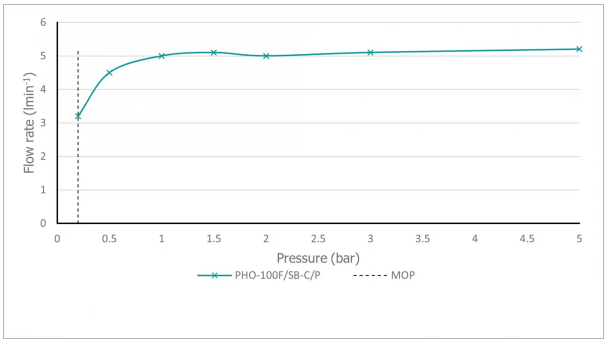

The flow rate displayed is calculated using ideal system conditions. This result should only be taken as an indication as the flow rate may vary depending on the specific in-situ configuration.

TAP TYPE
Basin Mixer Taps

FINISH
Chrome

COLLECTION NAME
Photon

GUARANTEE
15 Year Guarantee

PLUMBING SYSTEM SUITABILITY
Gravity System, Pumped System, Combination Boiler, Pressurised System

MINIMUM OPERATING PRESSURE
0.2 Bar LP

MAXIMUM OPERATING PRESSURE
5.0 Bar HP

HANDLES
Single Lever

MOUNTING
Deck Mounted

tel: 01934 744466
email: sales@vado.com
www.vado.com

WHERE INSPIRATION FLOWS

TAPS | SHOWERS | FURNITURE

VADO

SPECIFICATION SHEET

COLLECTION: PHOTON
PRODUCT CODE: PHO-100F/SB-C/P

RECOMMENDED FLOW REGULATOR

5 l/m flow regulator fitted as standard

WITH ECOTURN COLD START TECHNOLOGY

No

WITH WATER FLOW STRAIGHTENER

No

WITH WATER FLOW AERATOR

Yes

CONNECTIONS / FITTINGS

2 x 1/2" 400mm flexipipe connections

DECK HOLE DRILL DIAMETER

35mm

SPARE PARTS

ceramic cartridge C-009-N35R

tel: 01934 744466
email: sales@vado.com
www.vado.com

WHERE INSPIRATION FLOWS
TAPS | SHOWERS | FURNITURE

VADO

TECHNICAL DRAWING

COLLECTION: PHOTON
PRODUCT CODE: PHO-100F/SB-C/P

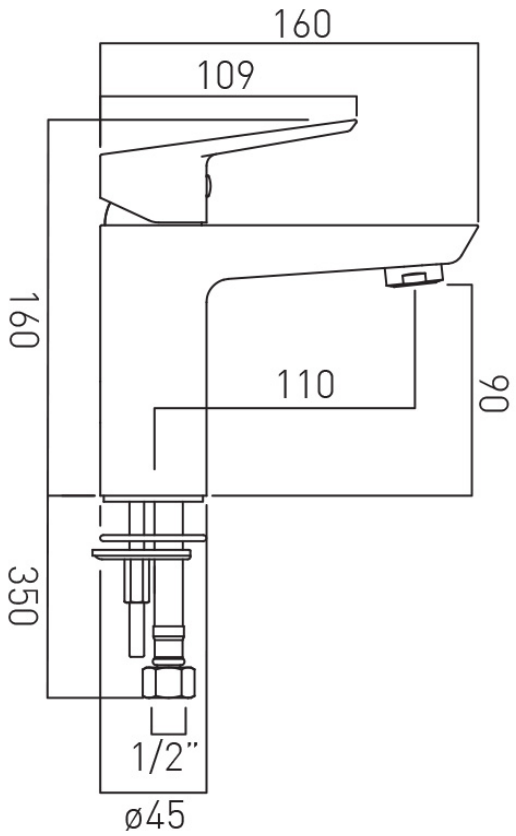

tel: 01934 744466
email: sales@vado.com
www.vado.com

WHERE INSPIRATION FLOWS
TAPS | SHOWERS | FURNITURE

VADO