SPECIFICATION SHEET

COLLECTION: CAMEO
PRODUCT CODE: CAM-123T-SBR

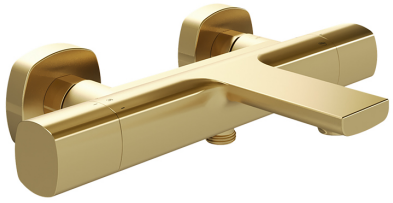

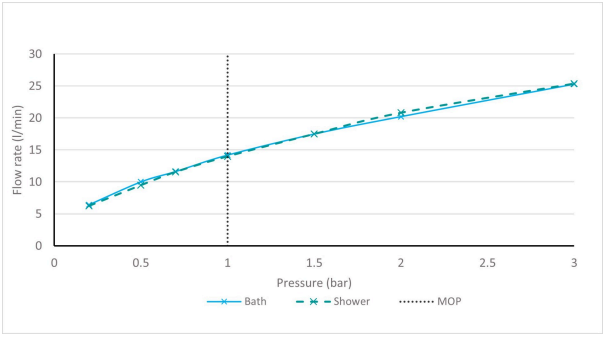

The flow rate displayed is calculated using ideal system conditions. This result should only be taken as an indication as the flow rate may vary depending on the specific in-situ configuration.

TAP TYPE
Bath Shower Mixers

PLUMBING SYSTEM SUITABILITY
Combination Boiler

HANDLES
2 Handle

MOUNTING
Wall Mounted

WITH INTEGRATED DIVERTER
No

WITH EASY-FIT BRACKETS
Yes

WITH SHOWER KIT
No

WITH THERMOSTATIC TECHNOLOGY
Yes

FOR USE WITH BATH FILLER WASTE AND OVERFLOW
No

tel: 01934 744466
email: sales@vado.com
www.vado.com

WHERE INSPIRATION FLOWS

TAPS | SHOWERS | FURNITURE

VADO

SPECIFICATION SHEET

COLLECTION: CAMEO
PRODUCT CODE: CAM-123T-SBR

MINIMUM OPERATING PRESSURE

1.0 Bar MP

MAXIMUM OPERATING PRESSURE

5.0 Bar HP

WITH BATH SPOUT

Yes

WITH AIR-INJECTION TECHNOLOGY

No

WITH WATER FLOW STRAIGHTENER

Yes

WITH WATER FLOW AERATOR

No

CONNECTIONS / FITTINGS

3/4" easy-fit brackets included

SPARE PARTS

Thermostatic cartridge V-704-34S. Diverter cartridge C-801-33/2P

STYLE

Square

FINISH

Satin Brass

COLLECTION NAME

Cameo

GUARANTEE

10 Year Guarantee

tel: 01934 744466
email: sales@vado.com
www.vado.com

WHERE INSPIRATION FLOWS
TAPS | SHOWERS | FURNITURE

VADO

TECHNICAL DRAWING

COLLECTION: CAMEO
PRODUCT CODE: CAM-123T-SBR

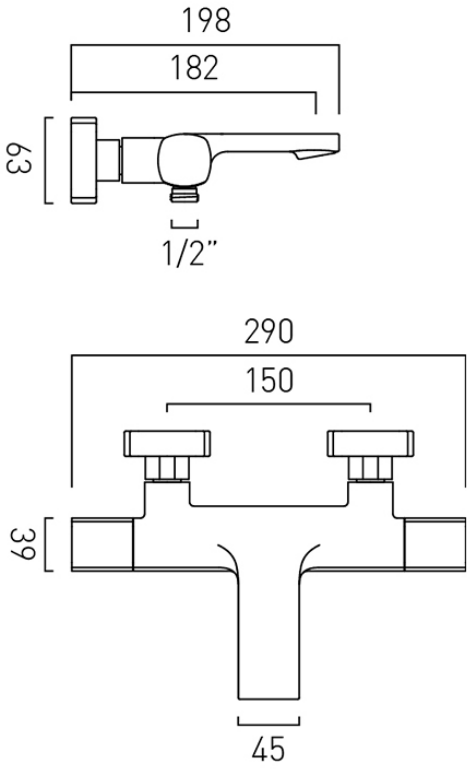

tel: 01934 744466
email: sales@vado.com
www.vado.com

WHERE INSPIRATION FLOWS
TAPS | SHOWERS | FURNITURE

VADO