# SPECIFICATION SHEET

## COLLECTION: CAMEO
## PRODUCT CODE: CAM-148D-MB



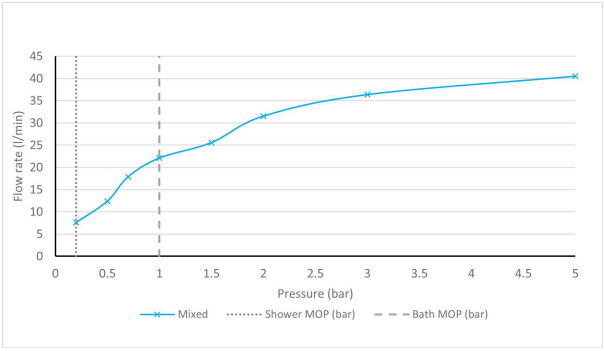


The flow rate displayed is calculated using ideal system conditions. This result should only be taken as an indication as the flow rate may vary depending on the specific in-situ configuration.

### SHOWER TYPE
Shower Valve

### VALVE TYPE
Concealed

### STYLE
Square Handles

### ORIENTATION
Horizontal

### NUMBER OF OUTLETS
1 Outlet

### HANDLES
2 Handle

### WITH ALL-FLOW FUNCTION
No

### WITH INTEGRATED DIVERTER
No

### COMPATIBLE WITH STUDFAST
No

tel: 01934 744466
email: sales@vado.com
www.vado.com

WHERE INSPIRATION FLOWS

TAPS | SHOWERS | FURNITURE

VADO

# SPECIFICATION SHEET

## COLLECTION: CAMEO
## PRODUCT CODE: CAM-148D-MB

WITH BLEED VALVE FOR SYSTEM FLUSH ON INSTALLATION

Yes

WITH SHOWER KIT

No

OPTIMUM INSTALLATION DEPTH

82mm

INCLUDES MORTAR / TILE GUARD

No

COMPATIBLE WITH EASY-FIX BRACKETS

No

WITH THERMOSTATIC TECHNOLOGY

Yes

MIN-MAX WALL MOUNT

70-95mm

SPARE PARTS

thermostatic cartridge V-704-34S, flow cartridge C-301-RTC

NOTES

2 x 3/4" female inlets
1 x 3/4" female outlet

MOUNTING

Wall Mounted

PLUMBING SYSTEM SUITABILITY

Gravity System, Combination Boiler

COLLECTION NAME

Cameo

tel: 01934 744466
email: sales@vado.com
www.vado.com

WHERE INSPIRATION FLOWS
TAPS | SHOWERS | FURNITURE

VADO

# SPECIFICATION SHEET

## COLLECTION: CAMEO
## PRODUCT CODE: CAM-148D-MB

FINISH

Matt Black

MINIMUM OPERATING PRESSURE

0.2 Bar LP (Shower) / 1.0 Bar MP (Bath)

GUARANTEE

15 Year Guarantee

tel: 01934 744466
email: sales@vado.com
www.vado.com

WHERE INSPIRATION FLOWS

TAPS | SHOWERS | FURNITURE

VADO

# TECHNICAL DRAWING

COLLECTION: CAMEO
PRODUCT CODE: CAM-148D-MB

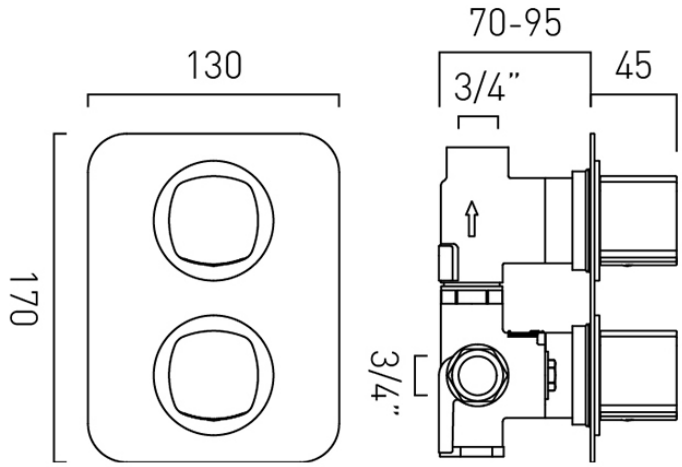


tel: 01934 744466
email: sales@vado.com
www.vado.com

WHERE INSPIRATION FLOWS
TAPS | SHOWERS | FURNITURE

VADO