SPECIFICATION SHEET

COLLECTION: CAMEO
PRODUCT CODE: CAM-100/SB-SBR



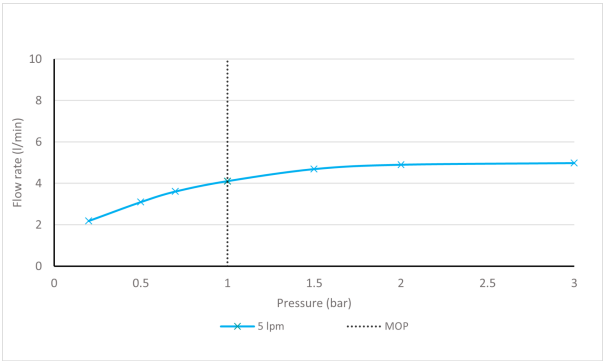

The flow rate displayed is calculated using ideal system conditions. This result should only be taken as an indication as the flow rate may vary depending on the specific in-situ configuration.

TAP TYPE
Basin Mixer Taps

FINISH
Satin Brass

COLLECTION NAME
Cameo

GUARANTEE
10 Year Guarantee

PLUMBING SYSTEM SUITABILITY
Combination Boiler

MINIMUM OPERATING PRESSURE
1.0 Bar MP

MAXIMUM OPERATING PRESSURE
5.0 Bar HP

MOUNTING
Deck Mounted

RECOMMENDED FLOW REGULATOR
5 l/min Flow Regulator

tel: 01934 744466
email: sales@vado.com
www.vado.com

WHERE INSPIRATION FLOWS
TAPS | SHOWERS | FURNITURE

VADO

SPECIFICATION SHEET

COLLECTION: CAMEO
PRODUCT CODE: CAM-100/SB-SBR

WITH ECOTURN COLD START TECHNOLOGY

No

WITH WATER FLOW STRAIGHTENER

No

WITH WATER FLOW AERATOR

No

CONNECTIONS / FITTINGS

2 x 1/2" 450mm flexipipe connection

DECK HOLE DRILL DIAMETER

35mm

SPARE PARTS

ceramic cartridge C-001-N30

STYLE

Square

tel: 01934 744466
email: sales@vado.com
www.vado.com

TECHNICAL DRAWING

COLLECTION: CAMEO
PRODUCT CODE: CAM-100/SB-SBR

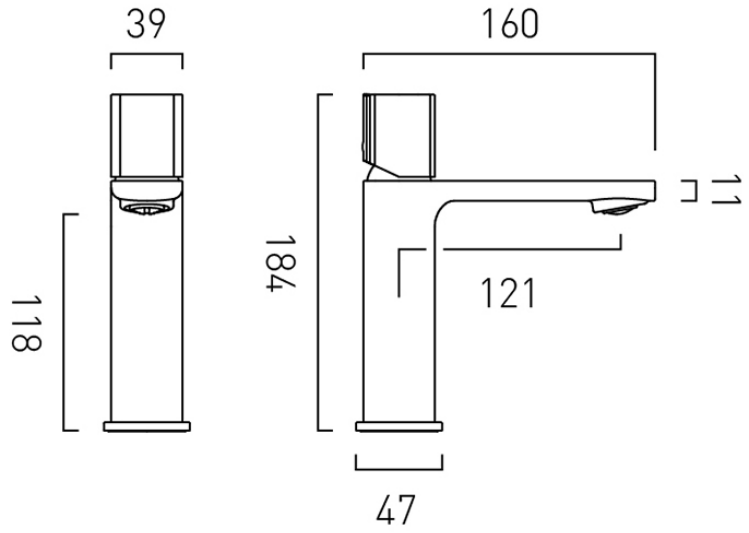

tel: 01934 744466
email: sales@vado.com
www.vado.com

WHERE INSPIRATION FLOWS
TAPS | SHOWERS | FURNITURE

VADO