SPECIFICATION SHEET

COLLECTION: CAMEO
PRODUCT CODE: CAM-F1200-AW



COLLECTION NAME
Cameo

FURNITURE TYPE
Vanity Unit

FINISH
Arctic White

VANITY WIDTH
1200mm

MOUNTING
Wall Mounted

DRAWERS
4 Drawers

GUARANTEE
6 Year Guarantee

BASIN SUITABILITY
Cameo, 1200mm Basins

FIXING LOCATION
100mm from top of unit

tel: 01934 744466
email: sales@vado.com
www.vado.com

WHERE INSPIRATION FLOWS
TAPS | SHOWERS | FURNITURE

VADO

SPECIFICATION SHEET

COLLECTION: CAMEO
PRODUCT CODE: CAM-F1200-AW

SPACE SAVING SOLUTION

Bottle trap cut out in top drawer

NOTES

Use dimension from the chosen basin waste to align waste centres

tel: 01934 744466
email: sales@vado.com
www.vado.com

WHERE INSPIRATION FLOWS

TAPS | SHOWERS | FURNITURE

VADO

TECHNICAL DRAWING

COLLECTION: CAMEO
PRODUCT CODE: CAM-F1200-AW

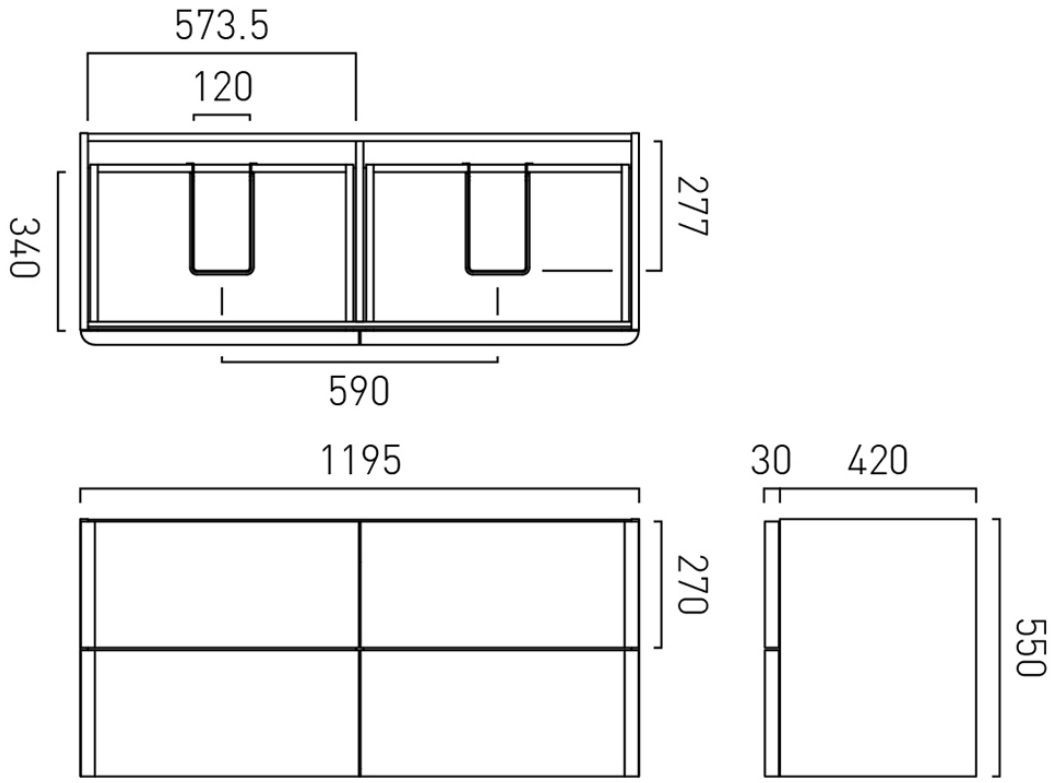

tel: 01934 744466
email: sales@vado.com
www.vado.com

WHERE INSPIRATION FLOWS
TAPS | SHOWERS | FURNITURE

VADO