# SPECIFICATION SHEET

## COLLECTION: CAMEO
## PRODUCT CODE: CAM-F800-PC



COLLECTION NAME
Cameo

FURNITURE TYPE
Vanity Unit

FINISH
Pink Clay

SIZE
800mm

MOUNTING
Wall Mounted

DRAWERS
2 Drawers

GUARANTEE
6 Year Guarantee

BASIN SUITABILITY
Cameo, 800mm Basins

FIXING LOCATION
100mm from top of unit

tel: 01934 744466
email: sales@vado.com
www.vado.com

WHERE INSPIRATION FLOWS
TAPS | SHOWERS | FURNITURE

VADO

# SPECIFICATION SHEET

## COLLECTION: CAMEO
## PRODUCT CODE: CAM-F800-PC

### SPACE SAVING SOLUTION

Bottle trap cut out in top drawer

### NOTES

Use dimension from the chosen basin waste to align waste centres

tel: 01934 744466
email: sales@vado.com
www.vado.com

WHERE INSPIRATION FLOWS

TAPS | SHOWERS | FURNITURE

VADO

# TECHNICAL DRAWING

COLLECTION: CAMEO
PRODUCT CODE: CAM-F800-PC

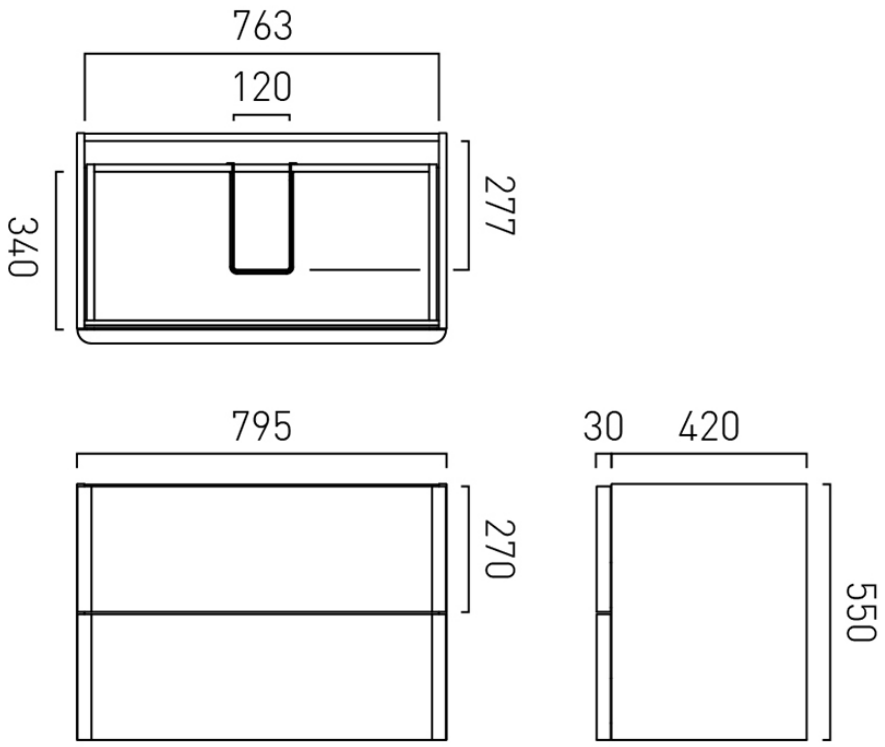


tel: 01934 744466
email: sales@vado.com
www.vado.com

WHERE INSPIRATION FLOWS
TAPS | SHOWERS | FURNITURE

VADO