SPECIFICATION SHEET

COLLECTION: WASTES & FITTINGS
PRODUCT CODE: IND-SHATTAF-BRZ



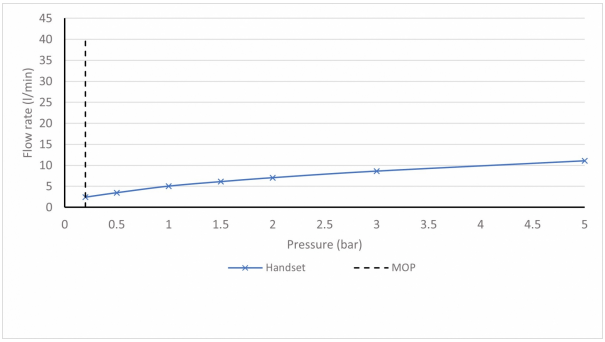

The flow rate displayed is calculated using ideal system conditions. This result should only be taken as an indication as the flow rate may vary depending on the specific in-situ configuration.

TAP TYPE
Wastes and Fittings

PLUMBING SYSTEM SUITABILITY
Gravity System, Combination Boiler

MOUNTING
Wall Mounted

HOSE
with 100cm hose

WITH THERMOSTATIC TECHNOLOGY
No

WITH OUTLET / BRACKET
with Bracket

COLLECTION NAME
Wastes & Fittings

FINISH
Brushed Bronze

MINIMUM OPERATING PRESSURE
1.0 Bar MP

tel: 01934 744466
email: sales@vado.com
www.vado.com

WHERE INSPIRATION FLOWS

TAPS | SHOWERS | FURNITURE

VADO

SPECIFICATION SHEET

COLLECTION: WASTES & FITTINGS
PRODUCT CODE: IND-SHATTAF-BRZ

GUARANTEE

15 Year Guarantee

tel: 01934 744466
email: sales@vado.com
www.vado.com

WHERE INSPIRATION FLOWS

TAPS | SHOWERS | FURNITURE

VADO

TECHNICAL DRAWING

COLLECTION: WASTES & FITTINGS
PRODUCT CODE: IND-SHATTAF-BRZ

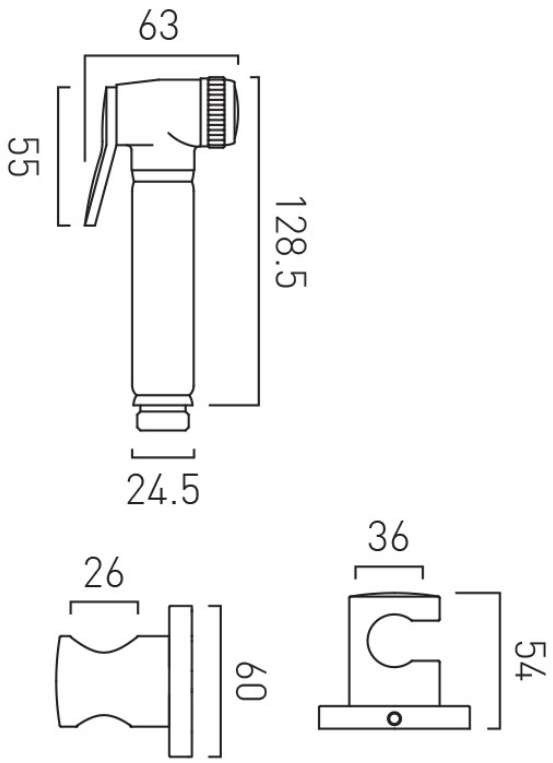

tel: 01934 744466
email: sales@vado.com
www.vado.com

WHERE INSPIRATION FLOWS
TAPS | SHOWERS | FURNITURE

VADO