SPECIFICATION SHEET

COLLECTION: SHOWERING SOLUTIONS
PRODUCT CODE: IND-SFMKWO/RO-BRZ



PLUMBING SYSTEM SUITABILITY
Gravity System, Pumped System, Combination Boiler, Pressurised System

MOUNTING
Wall Mounted

CONNECTIONS / FITTINGS
1/2" inlet

HOSE
with 150cm hose

FUNCTIONS
1

RUB-CLEAN NOZZLES
Yes

WITH OUTLET / BRACKET
with Integrated Outlet and Bracket

COLLECTION NAME
Showering Solutions

FINISH
Brushed Bronze

tel: 01934 744466
email: sales@vado.com
www.vado.com

WHERE INSPIRATION FLOWS

TAPS | SHOWERS | FURNITURE

VADO

SPECIFICATION SHEET

COLLECTION: SHOWERING SOLUTIONS
PRODUCT CODE: IND-SFMKWO/RO-BRZ

MINIMUM OPERATING PRESSURE

0.2 Bar LP

MAXIMUM OPERATING PRESSURE

5.0 Bar HP

GUARANTEE

15 Year Guarantee

tel: 01934 744466
email: sales@vado.com
www.vado.com

WHERE INSPIRATION FLOWS

TAPS | SHOWERS | FURNITURE

VADO

TECHNICAL DRAWING

COLLECTION: SHOWERING SOLUTIONS
PRODUCT CODE: IND-SFMKWO/RO-BRZ

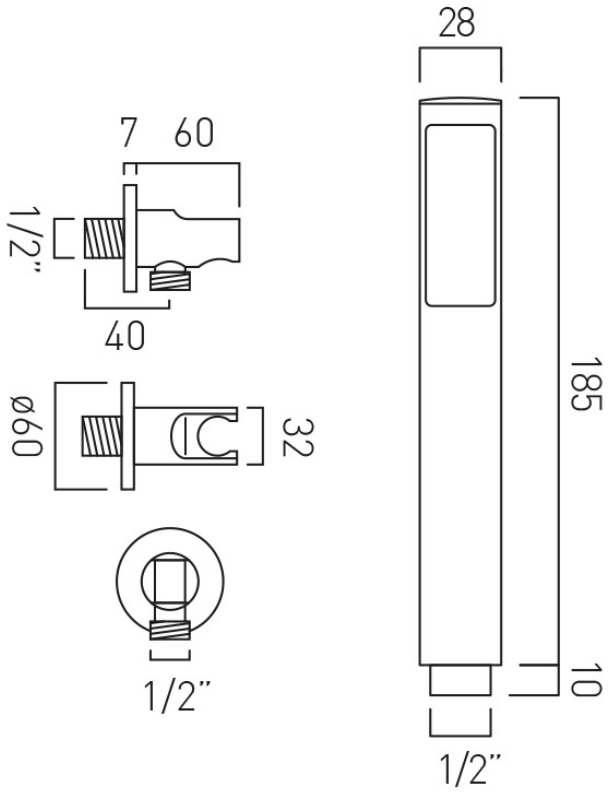

tel: 01934 744466
email: sales@vado.com
www.vado.com

WHERE INSPIRATION FLOWS
TAPS | SHOWERS | FURNITURE

VADO