SPECIFICATION SHEET

COLLECTION: ORIGINS
PRODUCT CODE: IND-ORI209SA-BRZ



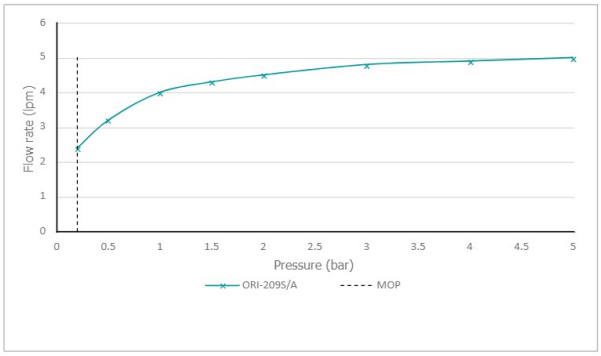

The flow rate displayed is calculated using ideal system conditions. This result should only be taken as an indication as the flow rate may vary depending on the specific in-situ configuration.

TAP TYPE
Basin Mixer Taps

FINISH
Brushed Bronze

COLLECTION NAME
Origins

GUARANTEE
15 Year Guarantee

PLUMBING SYSTEM SUITABILITY
Gravity System

MINIMUM OPERATING PRESSURE
0.2 Bar LP

MAXIMUM OPERATING PRESSURE
5.0 Bar HP

HANDLES
Single Lever

MOUNTING
Wall Mounted

tel: 01934 744466
email: sales@vado.com
www.vado.com

WHERE INSPIRATION FLOWS
TAPS | SHOWERS | FURNITURE

SPECIFICATION SHEET

COLLECTION: ORIGINS
PRODUCT CODE: IND-ORI209SA-BRZ

MIN-MAX WALL MOUNT

55-72mm

RECOMMENDED FLOW REGULATOR

5 l/m flow regulator fitted as standard

WITH ECOTURN COLD START TECHNOLOGY

No

WITH WATER FLOW STRAIGHTENER

No

WITH WATER FLOW AERATOR

Yes

CONNECTIONS / FITTINGS

2 x 1/2" inlets

WALL HOLE DRILL DIAMETER

Spout: 40-48mm Handle: 40-50mm

SPARE PARTS

ceramic cartridge CAR-K35B, tile-to mortar guard included

STYLE

Round

tel: 01934 744466
email: sales@vado.com
www.vado.com

WHERE INSPIRATION FLOWS
TAPS | SHOWERS | FURNITURE

VADO

TECHNICAL DRAWING

COLLECTION: ORIGINS
PRODUCT CODE: IND-ORI209SA-BRZ

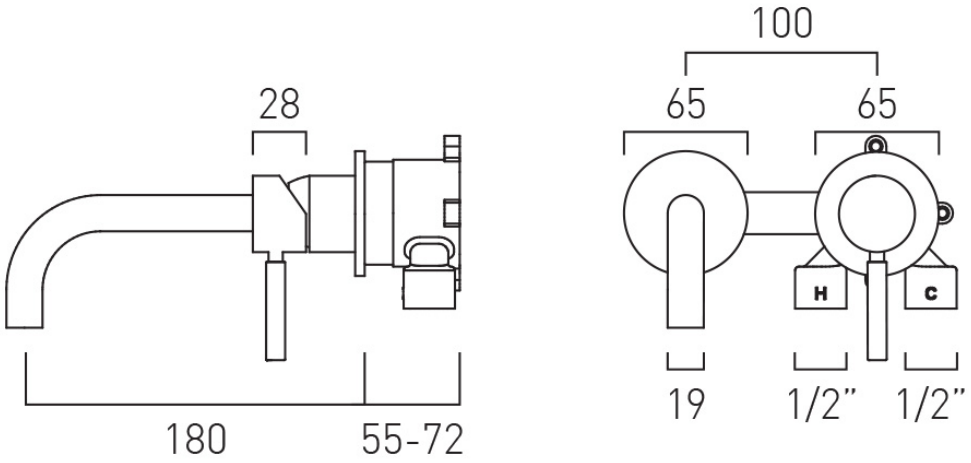

tel: 01934 744466
email: sales@vado.com
www.vado.com

WHERE INSPIRATION FLOWS
TAPS | SHOWERS | FURNITURE

VADO