SPECIFICATION SHEET

COLLECTION: EDIT
PRODUCT CODE: IND-EDI137-BRZ



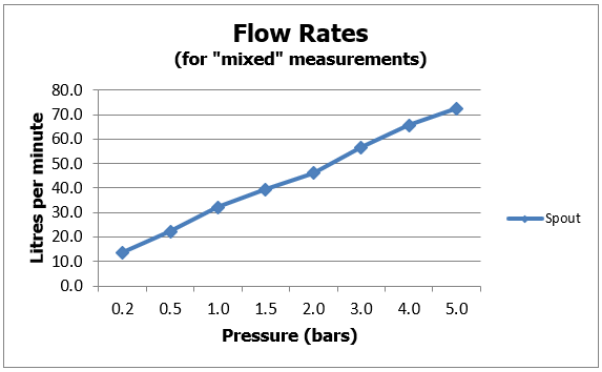

The flow rate displayed is calculated using ideal system conditions. This result should only be taken as an indication as the flow rate may vary depending on the specific in-situ configuration.

TAP TYPE
Bath Fillers

FINISH
Brushed Bronze

COLLECTION NAME
Edit

GUARANTEE
15 Year Guarantee

PLUMBING SYSTEM SUITABILITY
Gravity System, Pumped System, Combination Boiler, Pressurised System

MINIMUM OPERATING PRESSURE
0.2 Bar LP

MAXIMUM OPERATING PRESSURE
5.0 Bar HP

HANDLES
2 Handle

MOUNTING
Deck Mounted

tel: 01934 744466
email: sales@vado.com
www.vado.com

WHERE INSPIRATION FLOWS
TAPS | SHOWERS | FURNITURE

VADO

SPECIFICATION SHEET

COLLECTION: EDIT
PRODUCT CODE: IND-EDI137-BRZ

WITH ECOTURN COLD START TECHNOLOGY

No

WITH WATER FLOW STRAIGHTENER

No

WITH WATER FLOW AERATOR

No

CONNECTIONS / FITTINGS

2 x 3/4" 48mm threaded inlet connections

DECK HOLE DRILL DIAMETER

2 x 28-30mm

SPARE PARTS

cold ceramic cartridge C-302-RTC, hot ceramic cartridge C-302-LTC

STYLE

Round, Square

tel: 01934 744466
email: sales@vado.com
www.vado.com

WHERE INSPIRATION FLOWS
TAPS | SHOWERS | FURNITURE

VADO

TECHNICAL DRAWING

COLLECTION: EDIT
PRODUCT CODE: IND-EDI137-BRZ

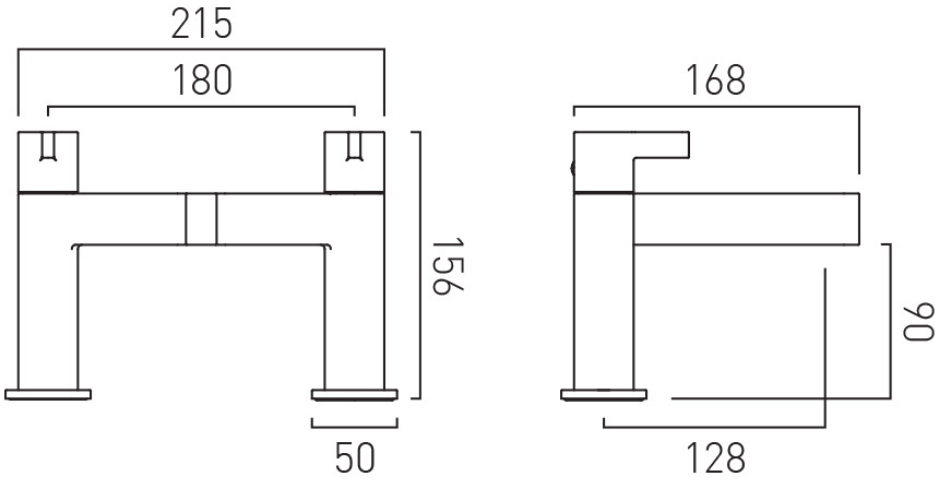

tel: 01934 744466
email: sales@vado.com
www.vado.com

WHERE INSPIRATION FLOWS
TAPS | SHOWERS | FURNITURE

VADO