SPECIFICATION SHEET

COLLECTION: WASTES & FITTINGS
PRODUCT CODE: AX-AST-1/R-3/4



COLLECTION NAME

Wastes & Fittings

GUARANTEE

10 Year Guarantee

WITH INTEGRAL INTERNAL 1/4 TURN LEVER ISOLATION VALVE

No

WITH INTEGRAL INTERNAL DEBRIS FILTER

No

WITH FINISHED HEIGHT FIXING LOCATION MARKING

No

tel: 01934 744466
email: sales@vado.com
www.vado.com

WHERE INSPIRATION FLOWS

TAPS | SHOWERS | FURNITURE

VADO

TECHNICAL DRAWING

COLLECTION: WASTES & FITTINGS
PRODUCT CODE: AX-AST-1/R-3/4

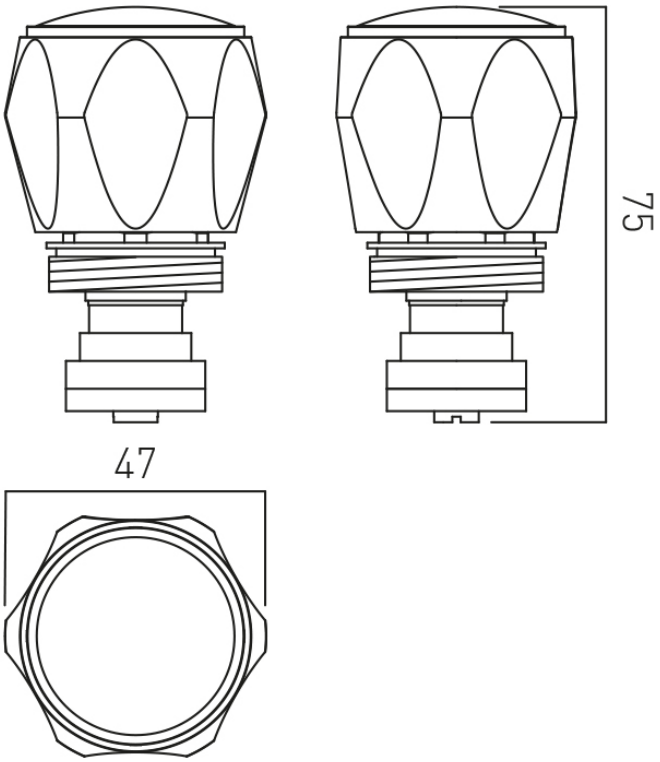

tel: 01934 744466
email: sales@vado.com
www.vado.com

WHERE INSPIRATION FLOWS
TAPS | SHOWERS | FURNITURE

VADO