SPECIFICATION SHEET

COLLECTION: WASTES & FITTINGS
PRODUCT CODE: IND-SHATTAF/163-BLK

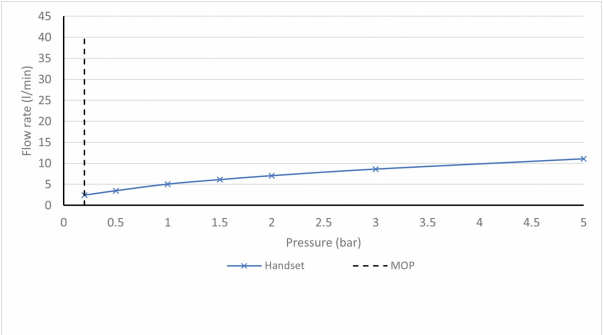

TAP TYPE
Wastes and Fittings

PLUMBING SYSTEM SUITABILITY
Pumped System, Combination Boiler, Pressurised System

MOUNTING
Wall Mounted

SPARE PARTS
mixing valve thermostatic cartridge V-001D-PLA

HOSE
with 150cm hose

WITH THERMOSTATIC TECHNOLOGY
Yes

WITH OUTLET / BRACKET
with Bracket

COLLECTION NAME
Wastes & Fittings

FINISH
Brushed Black

tel: 01934 744466
email: sales@vado.com
www.vado.com

WHERE INSPIRATION FLOWS
TAPS | SHOWERS | ACCESSORIES

VADO

SPECIFICATION SHEET

COLLECTION: WASTES & FITTINGS
PRODUCT CODE: IND-SHATTAF/163-BLK

MINIMUM OPERATING PRESSURE

1.0 Bar MP

GUARANTEE

15 Year Guarantee

tel: 01934 744466
email: sales@vado.com
www.vado.com

WHERE INSPIRATION FLOWS

TAPS | SHOWERS | ACCESSORIES

VADO

TECHNICAL DRAWING

COLLECTION: WASTES & FITTINGS
PRODUCT CODE: IND-SHATTAF/163-BLK

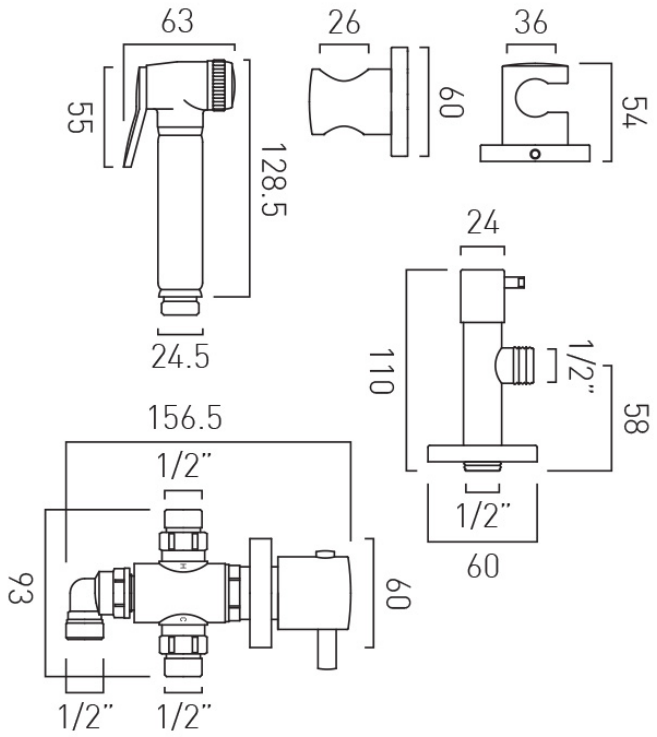

tel: 01934 744466
email: sales@vado.com
www.vado.com

WHERE INSPIRATION FLOWS
TAPS | SHOWERS | ACCESSORIES

VADO