SPECIFICATION SHEET

COLLECTION: KNURLED ACCENTS
PRODUCT CODE: IND-ORI209SA-BRGK

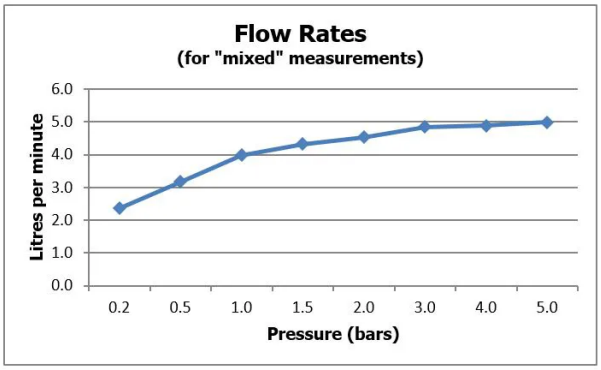

TAP TYPE
Basin Mixer

COLLECTION NAME
Knurled Accents

FINISH
Brushed Gold

RECOMMENDED FLOW REGULATOR
5 l/m flow regulator fitted as standard when installing below 1.0 bar pressure, removal of the flow regulator is required

MINIMUM OPERATING PRESSURE
0.2 Bar LP

MAXIMUM OPERATING PRESSURE
5.0 Bar LP

GUARANTEE
15 Year Guarantee

HANDLES
Single Lever

WITH ECOTURN COLD START TECHNOLOGY
No

tel: 01934 744466
email: sales@vado.com
www.vado.com

WHERE INSPIRATION FLOWS
TAPS | SHOWERS | ACCESSORIES

VADO

SPECIFICATION SHEET

COLLECTION: KNURLED ACCENTS
PRODUCT CODE: IND-ORI209SA-BRGK

NOTES
tile-to mortar guard included

WITH WATER FLOW STRAIGHTENER
No

WITH WATER FLOW AERATOR
Yes

INSTALLATION TOLERANCES
min-max wall mount 53-70mm

CONNECTIONS / FITTINGS
2 x 1/2" inlets

SPARE PARTS
ceramic cartridge CAR-K35B

WALL HOLE DRILL DIAMETER
Spout: 40-48mm Handle: 40-50mm

STYLE
Knurled

HOLES
2 Hole

MOUNTING
Wall Mounted

PLUMBING SYSTEM SUITABILITY
Gravity System, Pumped System, Combination Boiler, Pressurised System

tel: 01934 744466
email: sales@vado.com
www.vado.com

WHERE INSPIRATION FLOWS
TAPS | SHOWERS | ACCESSORIES
VADO

TECHNICAL DRAWING

COLLECTION: KNURLED ACCENTS
PRODUCT CODE: IND-ORI209SA-BRGK

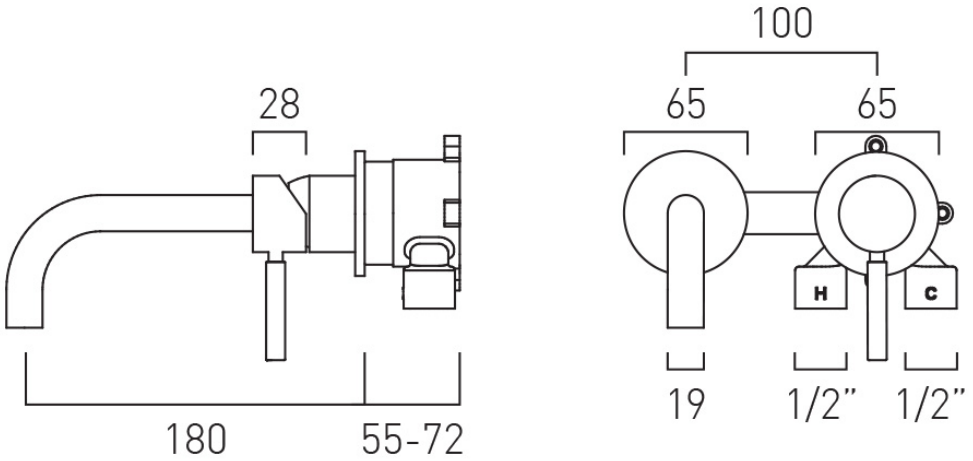

tel: 01934 744466
email: sales@vado.com
www.vado.com

WHERE INSPIRATION FLOWS
TAPS | SHOWERS | ACCESSORIES

VADO