# SPECIFICATION SHEET

## COLLECTION: NURI
## PRODUCT CODE: AX-NUR-110-CP

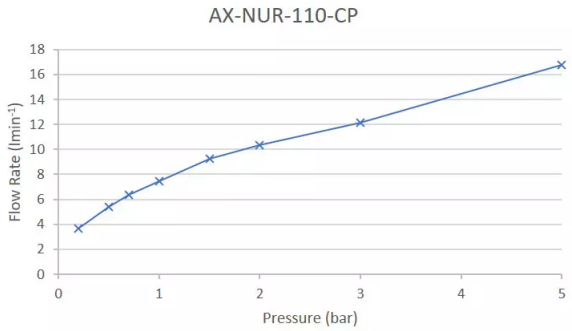


### TAP TYPE
Bidet Mixer

### PLUMBING SYSTEM SUITABILITY
Pumped System, Combination Boiler, Pressurised System

### MOUNTING
Deck Mounted

### WASTE
with Pop-up Waste

### DECK HOLE DRILL DIAMETER
35mm

### SPARE PARTS
Ceramic Cartridge W-001-N35

### HANDLES
Single Lever

### CONNECTIONS / FITTINGS
2 x 1/2" nut x 400mm flexipipe connections

### WITH WATER FLOW AERATOR
Yes

tel: 01934 744466
email: sales@vado.com
www.vado.com

WHERE INSPIRATION FLOWS
TAPS | SHOWERS | ACCESSORIES

VADO

# SPECIFICATION SHEET

## COLLECTION: NURI
## PRODUCT CODE: AX-NUR-110-CP

COLLECTION NAME

Nuri

FINISH

Chrome

MINIMUM OPERATING PRESSURE

1.0 Bar MP

GUARANTEE

10 Year Guarantee

tel: 01934 744466
email: sales@vado.com
www.vado.com

WHERE INSPIRATION FLOWS
TAPS | SHOWERS | ACCESSORIES
VADO

# TECHNICAL DRAWING

COLLECTION: NURI
PRODUCT CODE: AX-NUR-110-CP

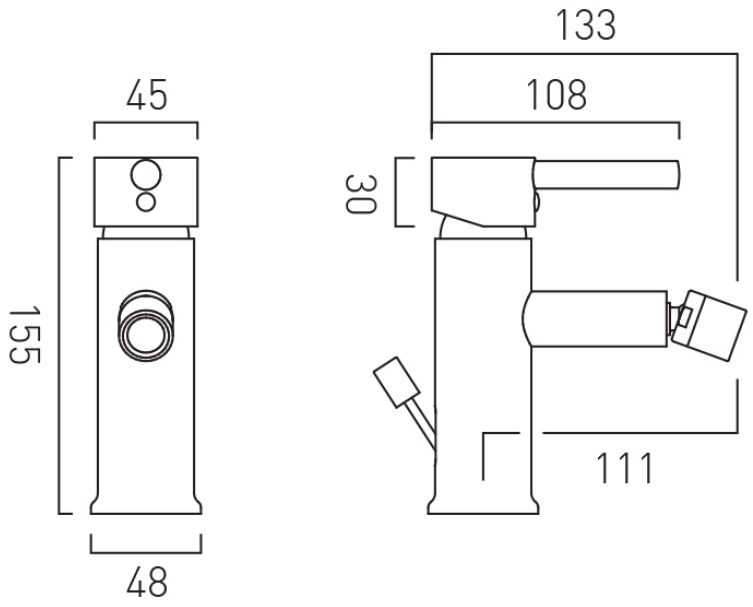


tel: 01934 744466
email: sales@vado.com
www.vado.com

WHERE INSPIRATION FLOWS
TAPS | SHOWERS | ACCESSORIES

VADO