SPECIFICATION SHEET

COLLECTION: WASTES & FITTINGS
PRODUCT CODE: IND-395-BRN

TAP TYPE
Wastes and Fittings

COLLECTION NAME
Wastes & Fittings

FINISH
Brushed Nickel

GUARANTEE
15 Year Guarantee

PLUMBING SYSTEM SUITABILITY
Pressurised System

NOTES
easily converts into a slotted or unslotted waste
clic-clac or free-flow

tel: 01934 744466
email: sales@vado.com
www.vado.com

WHERE INSPIRATION FLOWS
TAPS | SHOWERS | ACCESSORIES
VADO

SPECIFICATION SHEET

COLLECTION: WASTES & FITTINGS
PRODUCT CODE: IND-395-BRN

tel: 01934 744466
email: sales@vado.com
www.vado.com

WHERE INSPIRATION FLOWS
TAPS | SHOWERS | ACCESSORIES
VADO

TECHNICAL DRAWING

COLLECTION: WASTES & FITTINGS
PRODUCT CODE: IND-395-BRN

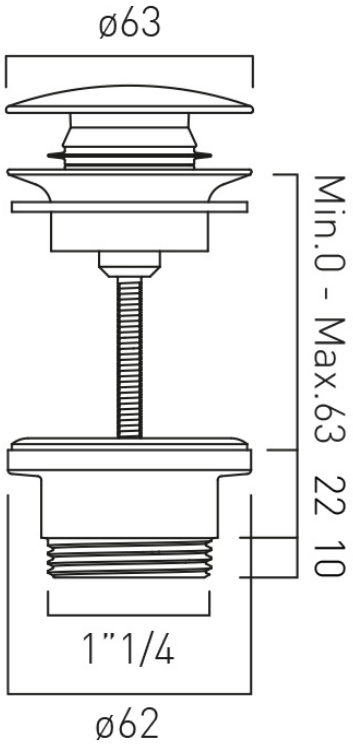

tel: 01934 744466
email: sales@vado.com
www.vado.com

WHERE INSPIRATION FLOWS
TAPS | SHOWERS | ACCESSORIES