SPECIFICATION SHEET

COLLECTION: ZOO
PRODUCT CODE: ZOO-100F/SB-C/P

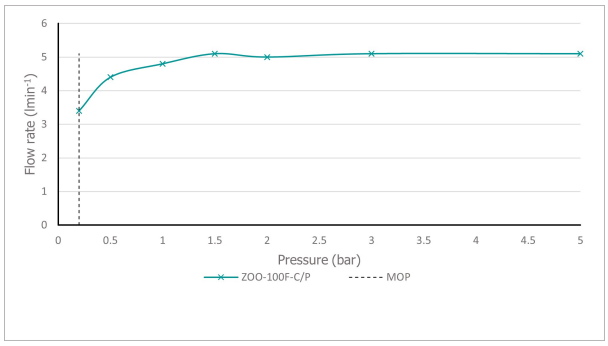

TAP TYPE
Basin Mixer

COLLECTION NAME
Zoo

FINISH
Chrome

RECOMMENDED FLOW REGULATOR
5 l/m flow regulator fitted as standard

MINIMUM OPERATING PRESSURE
0.2 Bar LP

MAXIMUM OPERATING PRESSURE
5.0 Bar LP

FLOW RATE AT 3.0 BAR FLOW PRESSURE
5.1 l/min

GUARANTEE
15 Year Guarantee

HANDLES
Single Lever

tel: 01934 744466
email: sales@vado.com
www.vado.com

WHERE INSPIRATION FLOWS
TAPS | SHOWERS | ACCESSORIES

VADO

SPECIFICATION SHEET

COLLECTION: ZOO
PRODUCT CODE: ZOO-100F/SB-C/P

WITH ECOTURN COLD START TECHNOLOGY
No

WITH WATER FLOW STRAIGHTENER
No

WITH WATER FLOW AERATOR
Yes

CONNECTIONS / FITTINGS
2 x 1/2" 400mm flexipipe connection

SPARE PARTS
ceramic cartridge CAR-K40A

DECK HOLE DRILL DIAMETER
35mm

STYLE
Round

MOUNTING
Deck Mounted

PLUMBING SYSTEM SUITABILITY
Gravity System, Pumped System, Combination Boiler, Pressurised System

tel: 01934 744466
email: sales@vado.com
www.vado.com

WHERE INSPIRATION FLOWS
TAPS | SHOWERS | ACCESSORIES
VADO

TECHNICAL DRAWING

COLLECTION: ZOO
PRODUCT CODE: ZOO-100F/SB-C/P

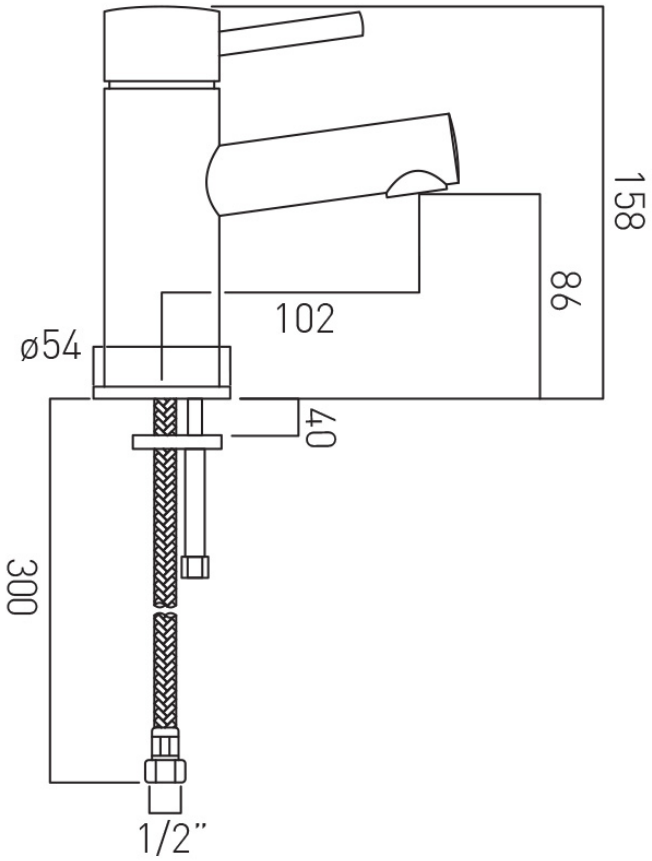

tel: 01934 744466
email: sales@vado.com
www.vado.com

WHERE INSPIRATION FLOWS
TAPS | SHOWERS | ACCESSORIES

VADO