SPECIFICATION SHEET

COLLECTION: SENSE
PRODUCT CODE: SEN-100F/SB-C/P

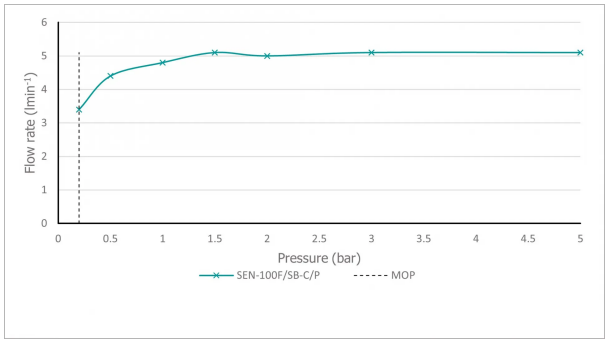

TAP TYPE
Basin Mixer

COLLECTION NAME
Sense

FINISH
Chrome

RECOMMENDED FLOW REGULATOR
5 l/m flow regulator fitted as standard

MINIMUM OPERATING PRESSURE
0.2 Bar LP

MAXIMUM OPERATING PRESSURE
5.0 Bar LP

GUARANTEE
15 Year Guarantee

HANDLES
Single Lever

WITH ECOTURN COLD START TECHNOLOGY
No

tel: 01934 744466
email: sales@vado.com
www.vado.com

WHERE INSPIRATION FLOWS
TAPS | SHOWERS | ACCESSORIES

VADO

SPECIFICATION SHEET

COLLECTION: SENSE
PRODUCT CODE: SEN-100F/SB-C/P

WITH WATER FLOW STRAIGHTENER
No

WITH WATER FLOW AERATOR
Yes

CONNECTIONS / FITTINGS
2 x 1/2" 400mm flexipipe connection

SPARE PARTS
ceramic cartridge CAR-K40A

DECK HOLE DRILL DIAMETER
35mm

MOUNTING
Deck Mounted

PLUMBING SYSTEM SUITABILITY
Gravity System, Pumped System, Combination Boiler, Pressurised System

tel: 01934 744466
email: sales@vado.com
www.vado.com

WHERE INSPIRATION FLOWS
TAPS | SHOWERS | ACCESSORIES
VADO

TECHNICAL DRAWING

COLLECTION: SENSE
PRODUCT CODE: SEN-100F/SB-C/P

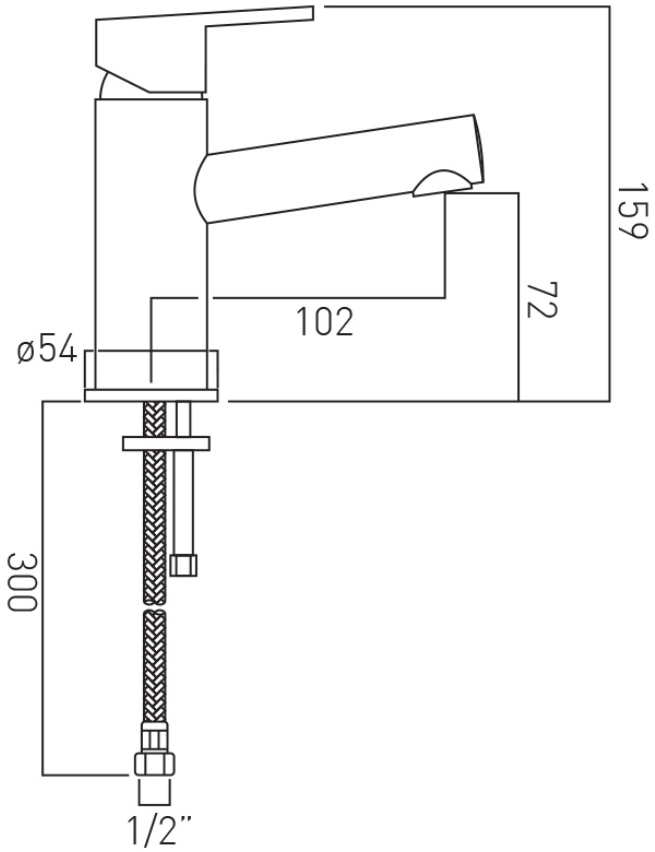

tel: 01934 744466
email: sales@vado.com
www.vado.com

WHERE INSPIRATION FLOWS
TAPS | SHOWERS | ACCESSORIES

VADO