SPECIFICATION SHEET

COLLECTION: DX PHASE
PRODUCT CODE: PHA-148D/2-C/P

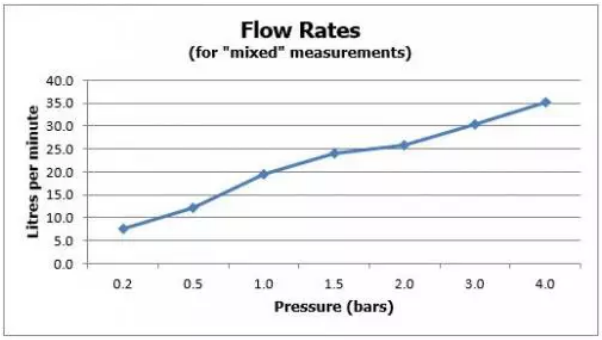

SHOWER TYPE
Shower Valve

VALVE TYPE
Concealed

ORIENTATION
Vertical

NUMBER OF OUTLETS
1 Outlet

WITH ALL-FLOW FUNCTION
No

WITH INTEGRATED DIVERTER
No

COMPATIBLE WITH STUDFAST
Yes

WITH BLEED VALVE FOR SYSTEM FLUSH ON INSTALLATION
Yes

WITH SHOWER KIT
No

tel: 01934 744466
email: sales@vado.com
www.vado.com

WHERE INSPIRATION FLOWS
TAPS | SHOWERS | ACCESSORIES

VADO

SPECIFICATION SHEET

COLLECTION: DX PHASE
PRODUCT CODE: PHA-148D/2-C/P

INCLUDES MORTAR / TILE GUARD
Yes

COMPATIBLE WITH EASY-FIX BRACKETS
No

WITH THERMOSTATIC TECHNOLOGY
Yes

INSTALLATION TOLERANCES
min-max wall mount 70-95mm optimum installation depth 82mm

CONNECTIONS / FITTINGS
2 x 3/4" female inlets 2 x 3/4" female outlets includes 3/4" - 1/2" adaptors

SPARE PARTS
thermostatic cartridge V-704-34S diverter cartridge C-803-33X/3X

MOUNTING
Wall Mounted

PLUMBING SYSTEM SUITABILITY
Gravity System, Pumped System, Combination Boiler, Pressurised System

COLLECTION NAME
DX Phase

FINISH
Chrome

MINIMUM OPERATING PRESSURE
0.2 Bar LP (Shower) / 1.0 Bar MP (Bath)

GUARANTEE
15 Year Guarantee

tel: 01934 744466
email: sales@vado.com
www.vado.com

WHERE INSPIRATION FLOWS
TAPS | SHOWERS | ACCESSORIES
VADO

TECHNICAL DRAWING

COLLECTION: DX PHASE
PRODUCT CODE: PHA-148D/2-C/P

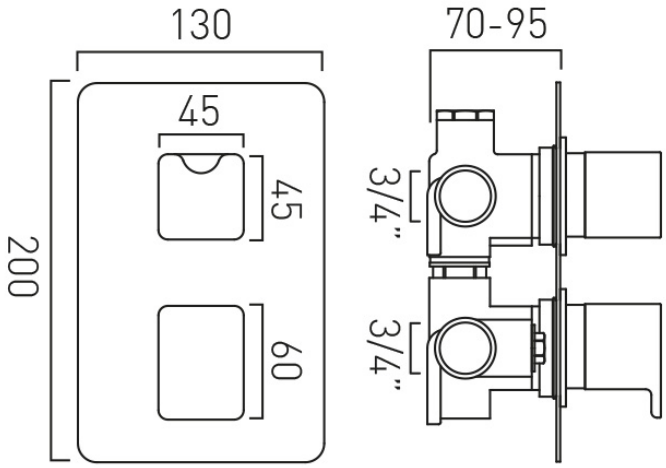

tel: 01934 744466
email: sales@vado.com
www.vado.com

WHERE INSPIRATION FLOWS
TAPS | SHOWERS | ACCESSORIES

VADO