SPECIFICATION SHEET

COLLECTION: I-TECH
PRODUCT CODE: IR-109/NOT-C/P

TAP TYPE
Infra-red

PLUMBING SYSTEM SUITABILITY
Pumped System, Combination Boiler, Pressurised System

MOUNTING
Deck Mounted

SPARE PARTS
central processing unit: IR-109/CONTROL

WITH WATER FLOW AERATOR
Yes

NOTES
Mains or battery operated
Takes standard AA batteries

COLLECTION NAME
I-Tech

FINISH
Chrome

RECOMMENDED FLOW REGULATOR
FR-100/5-PLA

tel: 01934 744466
email: sales@vado.com
www.vado.com

WHERE INSPIRATION FLOWS
TAPS | SHOWERS | ACCESSORIES
VADO

SPECIFICATION SHEET

COLLECTION: I-TECH
PRODUCT CODE: IR-109/NOT-C/P

MINIMUM OPERATING PRESSURE

1.0 Bar MP

GUARANTEE

5 Year Guarantee

tel: 01934 744466
email: sales@vado.com
www.vado.com

WHERE INSPIRATION FLOWS
TAPS | SHOWERS | ACCESSORIES
VADO

TECHNICAL DRAWING

COLLECTION: I-TECH
PRODUCT CODE: IR-109/NOT-C/P

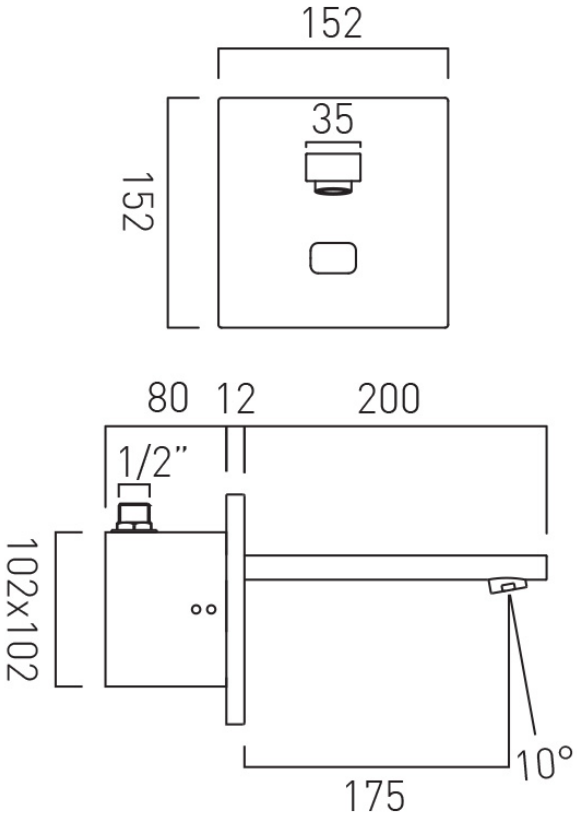

tel: 01934 744466
email: sales@vado.com
www.vado.com

WHERE INSPIRATION FLOWS
TAPS | SHOWERS | ACCESSORIES

VADO